Ball Valves

2-Way Series

Pressures to 20,000 psi (1379 bar)

Parker Autoclave Engineers high-pressure ball valves have been designed to provide superior quality for maximum performance within a variety of valve styles, sizes, and process connections. Some of the more unique design innovations include an integral one-piece trunnion mounted style ball and stem that eliminates the shear failure common in two piece designs, re-torqueable seat glands that result in longer seat life, and a low friction stem seal that reduces actuation torque and enhances cycle life.

These ball valves can also be modified to incorporate the use of special materials, seals for high temperature applications, subsea models, and valve actuators.

When it comes to high-pressure applications, these ball valves with the associated high-pressure components, provide the critical performance demanded by the high pressure market.

Flow Configuration

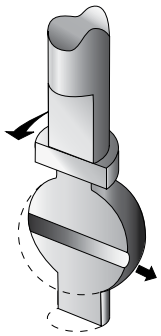

Two-Way Shut-Off

Ball Valve Features:

- One-piece, trunnion mounted style, stem design eliminates shear failure and reduces the effects of side loading found in two piece designs.
- Re-torqueable seat glands for longer seat life.
- PEEK seats offer excellent resistance to chemicals, heat, and wear/abrasion.
- Full-port flow path minimizes pressure drop.
- 316 cold worked stainless steel construction.
- Low friction pressure assisted graphite filled PTFE stem seal increases cycle life and reduces operating torque.
- Quarter turn from open to close with positive stop.
- Viton o-rings for operation from 0°F (-17.8°C) to 400°F (204°C).
- Optional o-rings available for high-temperature applications.
- Optional wetted materials.
- Wide selection of tube and pipe end fittings available.
- Electric and pneumatic actuator options.

Applications:

- Laboratories
- Test Stands
- Control Panels
- Chemical Research
- Pilot Plants
- Water Blast Pumping Units
- High volume chemical injection skids.

Parker

Autoclave Engineers®

www.autoclave.com

Ball Valves - 2-Way Series (1/4" Orifice)

Pressures to 20,000 psi (1379 bar) .250" (6.35mm) Orifice

Connection	MAWP @ Room Temperature	Minimum Orifice inches(mm)
W125	15,000 psi (1034 bar)	.094 (2.39)
SW250	15,000 psi (1034 bar)	.128 (3.25)
SW375	15,000 psi (1034 bar)	.250 (6.35)
SW500	10,000 psi (690 bar)	.250 (6.35)
SF250CX20	20,000 psi (1379 bar)	.109 (2.77)
SF375CX20	20,000 psi (1379 bar)	.203 (5.16)
SF562CX20	20,000 psi (1379 bar)	.250 (6.35)
F250C	20,000 psi (1379 bar)	.094 (2.39)
F375C	20,000 psi (1379 bar)	.125 (3.17)
F562C	20,000 psi (1379 bar)	.188 (4.77)
1/8" NPT	15,000 psi (1034 bar)	.250 (6.35)
1/4" NPT	15,000 psi (1034 bar)	.250 (6.35)
3/8" NPT	15,000 psi (1034 bar)	.250 (6.35)
1/2" NPT	15,000 psi (1034 bar)	.250 (6.35)
	Valve C_V=1.51	

MAWP: Maximum Allowable Working Pressure
C_V listed is for maximum orifice size of .250 inches only.
Consult factory for C_V of valves with reduced orifice sizes.

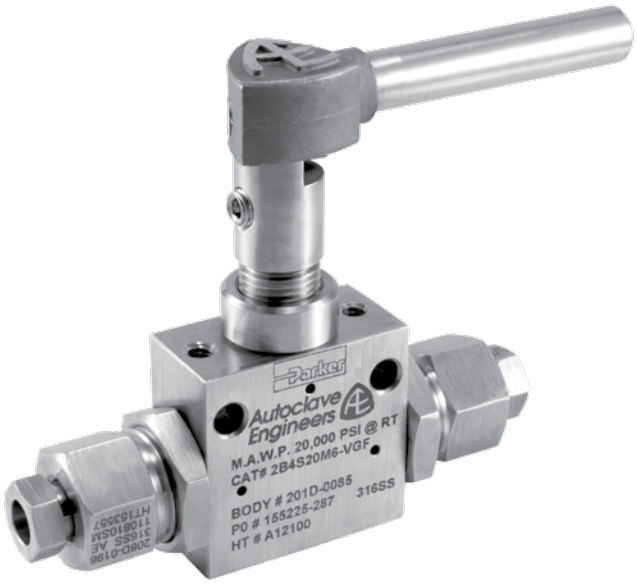

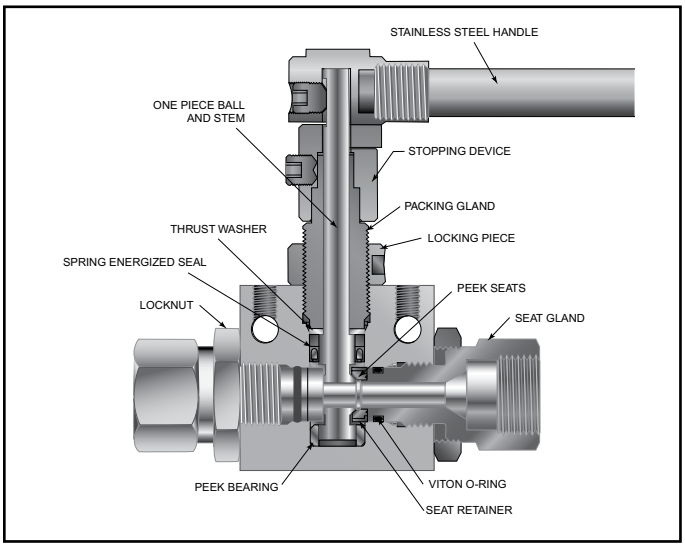

PRESSURE TEMPERATURE RATINGS

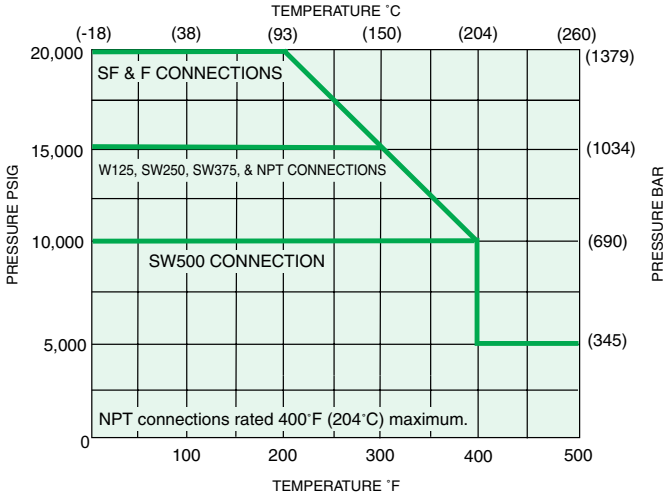

Pressure ratings are determined by the end connections chosen, see chart.

NOTE: Ball valves are not recommended for critical gas applications such as Hydrogen, Helium or other small molecular gases.

Ordering Procedure

For complete information on available end connections and material options, see next page. 2-way ball valves are furnished complete with tube or pipe connections.

Typical catalog number: **2B 4 S 20 M9**

2B — **Valve Series**
2B: 2-way

4 — **Ball Orifice Diameter**
4-1/4" (6.35 mm)

S — **Material**
S -316SS
(For material options contact factory)

20 — **Pressure (X 1000 psi)**

M9 — **End Connection**
M9 - SF562CX20
(See Chart on next page)

— **XXX** — **Options**
HT - High Temperature
(Ball Valve Actuators, see next page)

End Connection Options

Catalog Number	End Connection Number	Connection	MAWP @ Room Temperature	Seat Gland Hex Inches(mm)
2B4S15L2	L2	W125	15,000 psi (1034 bar)	1 (25.40)
2B4S15L4	L4	SW250	15,000 psi (1034 bar)	1 (25.40)
2B4S15L6	L6	SW375	15,000 psi (1034 bar)	1 (25.40)
2B4S10L8	L8	SW500	10,000 psi (690 bar)	1 (25.40)
2B4S20M4	M4	SF250CX20	20,000 psi (1379 bar)	1 (25.40)
2B4S20M6	M6	SF375CX20	20,000 psi (1379 bar)	1 (25.40)
2B4S20M9	M9	SF562CX20	20,000 psi (1379 bar)	1 (25.40)
2B4S20H4	H4	F250C	20,000 psi (1379 bar)	1 (25.40)
2B4S20H6	H6	F375C	20,000 psi (1379 bar)	1 (25.40)
2B4S20H9	H9	F562C	20,000 psi (1379 bar)	1.38 (35.05)
2B4S15P2	P2	1/8” NPT	15,000 psi (1034 bar)	1 (25.40)
2B4S15P4	P4	1/4” NPT	15,000 psi (1034 bar)	1 (25.40)
2B4S15P6	P6	3/8” NPT	15,000 psi (1034 bar)	1 (25.40)
2B4S15P8	P8	1/2” NPT	15,000 psi (1034 bar)	1.38 (35.05)

MAWP: Maximum Allowable Working Pressure

See ball valve option/details section for end connection details, material, and high temperature options.

Ball Valve Options

Pneumatic Actuator

AO - Air-to-open/spring to close
AC - Air-to-close/spring to open
AOC - Air-to-open-and-close (double action)

Electric Actuator

EO1 - 120 volt AC 50/60 Hz
EO2 - 220 volt AC 50/60 Hz
EO3 - 24 VDC

Actuator Operating Temperature:

Pneumatic: 0˚F to 175˚F (-17˚C to 79˚C)
Electric: 0˚F to 160˚F (-17˚C to 71˚C)

High Temperature Option:

HT - for media temperature up to 500˚F (260˚C)

See ball valve actuator section for full description, additional information, and options.

Valve Maintenance

Repair Kits: add “**R**” to the front of valve catalog first 4 numbers for proper repair kit. (Example: **R2B4S**)

Consult your Parker Autoclave Engineers representative for pricing on repair kits. Refer to the Operation and Maintenance manual for proper maintenance procedures.

Ball Valves - 2-Way Series (3/8" Orifice)

Pressures to 20,000 psi (1379 bar) .375" (9.52mm) Orifice

Connection	MAWP @ Room Temperature	Minimum Orifice inches(mm)
SW500	10,000 psi (690 bar)	.375 (9.52)
SF375CX20	20,000 psi (1379 bar)	.203 (5.16)
SF562CX20	20,000 psi (1379 bar)	.312 (7.92)
SF750CX20	20,000 psi (1379 bar)	.328 (8.33)
1/4" NPT	15,000 psi (1034 bar)	.375 (9.52)
3/8" NPT	15,000 psi (1034 bar)	.375 (9.52)
1/2" NPT	15,000 psi (1034 bar)	.375 (9.52)
	Valve C_V=3.51	

MAWP: Maximum Allowable Working Pressure
C_V listed is for maximum orifice size of .375 inches only.
Consult factory for C_V of valves with reduced orifice sizes.

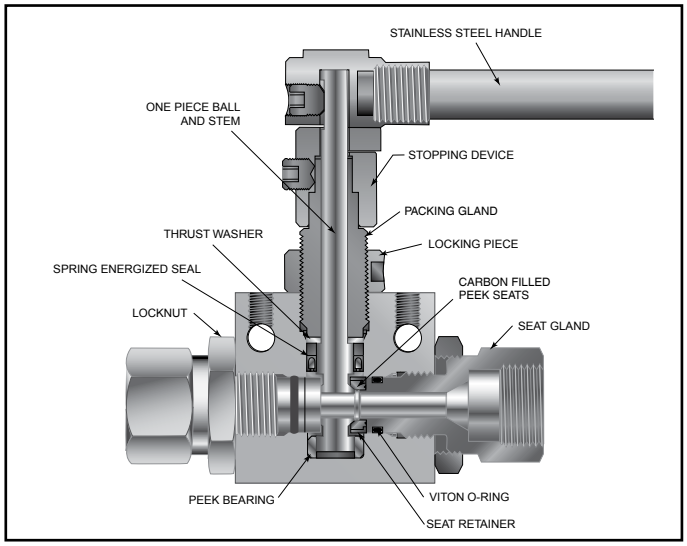

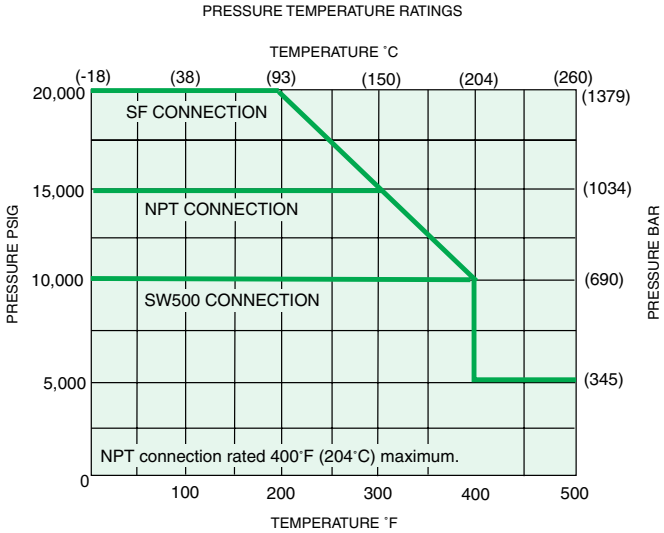

Pressure ratings are determined by the end connections chosen, see chart.

NOTE: Ball valves are not recommended for critical gas applications such as Hydrogen, Helium or other small molecular gases.

Ordering Procedure

For complete information on available end connections and material options, see next page. 2-way ball valves are furnished complete with tube or pipe connections.

Typical catalog number: **2B 6 S 20 M9**

2B — **Valve Series**
2B: 2-way

6 — **Ball Orifice Diameter**
6-3/8" (9.52 mm)

S — **Material**
S - 316SS
(For material options contact factory)

20 — **Pressure (X 1000 psi)**

M9 — **End Connection**
M9 - SF562CX20 (See Chart on next page)

— **XXX** — **Options**
HT - High Temperature (Ball Valve Acutators, see next page.)

End Connection Options

Catalog Number	End Connection Number	Connection	MAWP @ Room Temperature	Seat Gland Hex Inches(mm)
2B6S10L8	L8	SW500	10,000 psi (690 bar)	1.38 (35.05)
2B6S20M6	M6	SF375CX20	20,000 psi (1379 bar)	1.38 (35.05)
2B6S20M9	M9	SF562CX20	20,000 psi (1379 bar)	1.38 (35.05)
2B6S20M12	M12	SF750CX20	20,000 psi (1379 bar)	1.38 (35.05)
2B6S15P4	P4	1/4” NPT	15,000 psi (1034 bar)	1.38 (35.05)
2B6S15P6	P6	3/8” NPT	15,000 psi (1034 bar)	1.38 (35.05)
2B6S15P8	P8	1/2” NPT	15,000 psi (1034 bar)	1.38 (35.05)

MAWP: Maximum Allowable Working Pressure

See ball valve option/details section for end connection details, material, and high temperature options.

Ball Valve Options

Pneumatic Actuator

AO - Air-to-open/spring to close
AC - Air-to-close/spring to open
AOC - Air-to-open-and-close (double action)

Electric Actuator

EO1 - 120 volt AC 50/60 Hz
EO2 - 220 volt AC 50/60 Hz
EO3 - 24 VDC

Actuator Operating Temperature:

Pneumatic: 0˚F to 175˚F (-17˚C to 79˚C)
Electric: 0˚F to 160˚F (-17˚C to 71˚C)

High Temperature Option:

HT - for media temperature up to 500˚F (260˚C)

See ball valve actuator section for full description, additional information, and options.

Valve Maintenance

Repair Kits: add “**R**” to the front of valve catalog first 4 numbers for proper repair kit. (Example: **R2B6S**)

Consult your Parker Autoclave Engineers representative for pricing on repair kits. Refer to the Operation and Maintenance manual for proper maintenance procedures.

Ball Valves - 2-Way Series (1/2" Orifice)

Pressures to 15,000 psi (1034 bar) .500" (12.7mm) Orifice

Connection	MAWP @ Room Temperature	Minimum Orifice Inches (mm)
SF750CX20	15,000 psi (1034 bar)	.500 (12.70)
SF1000CX20	15,000 psi (1034 bar)	.500 (12.70)
3/4" NPT	10,000 psi (690 bar)	.500 (12.70)
1" NPT	10,000 psi (690 bar)	.500 (12.70)
	Valve C_V=10.20	

MAWP: Maximum Allowable Working Pressure

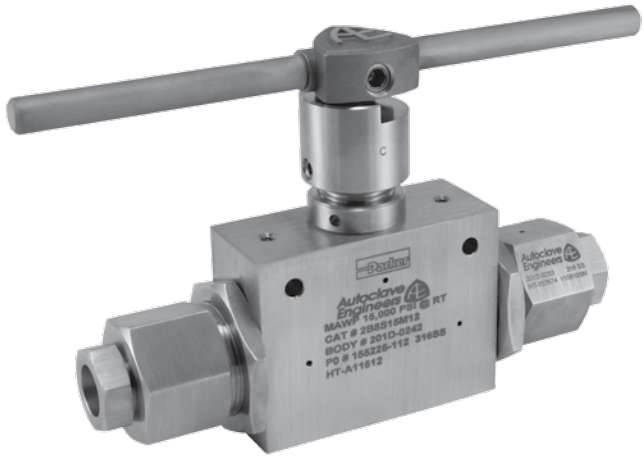

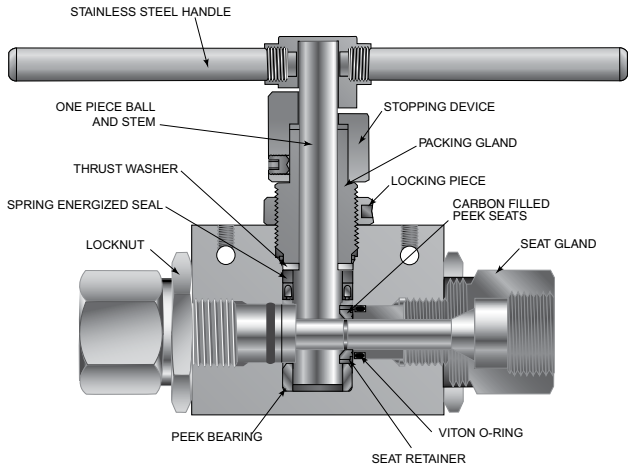

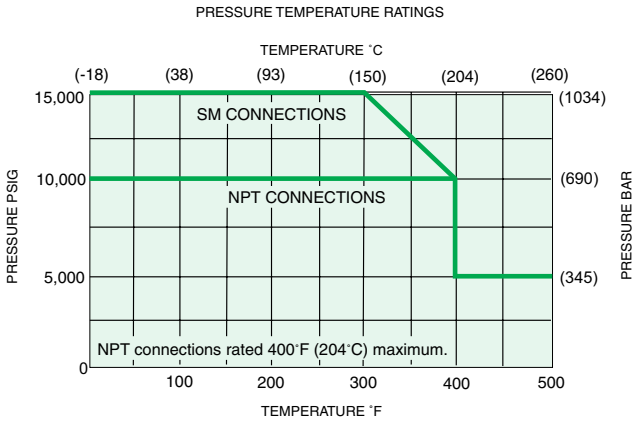

Pressure ratings are determined by the end connections chosen, see chart.

NOTE: Ball valves are not recommended for critical gas applications such as Hydrogen, Helium or other small molecular gases.

Ordering Procedure

For complete information on available end connections and material options, see next page. 2-way ball valves are furnished complete with tube or pipe connections.

Typical catalog number: **2B 8 S 15 M12**

2B — **Valve Series**
2B: 2-way

8 — **Ball Orifice Diameter**
8-1/2" (12.7 mm)

S — **Material**
S -316SS
(For material options contact factory)

15 — **Pressure (X 1000 psi)**

M12 — **End Connection**
M12 - SF750CX20
(See Chart on next page)

—

XXX — **Options**
HT - High Temperature
(Ball Valve Acutators, see next page.)

End Connection Options

Catalog Number	End Connection Number	Connection	MAWP @ Room Temperature	Seat Gland Hex Inches(mm)
2B8S15M12	M12	SF750CX20	15,000 psi (1034 bar)	1.75 (44.5)
2B8S15M16	M16	SF1000CX20	15,000 psi (1034 bar)	1.75 (44.5)
2B8S10P12	P12	3/4” NPT	10,000 psi (690 bar)	1.75 (44.5)
2B8S10P16	P16	1” NPT	10,000 psi (690 bar)	1.75 (44.5)

MAWP: Maximum Allowable Working Pressure

See ball valve option/details section for end connection details, material, and high temperature options.

Ball Valve Options

Pneumatic Actuator

AO - Air-to-open/spring to close
AC - Air-to-close/spring to open
AOC - Air-to-open-and-close (double action)

Electric Actuator

EO1 - 120 volt AC 50/60 Hz
EO2 - 220 volt AC 50/60 Hz
EO3 - 24 VDC

Actuator Operating Temperature:

Pneumatic: 0˚F to 175˚F (-17˚C to 79˚C)
Electric: 0˚F to 160˚F (-17˚C to 71˚C)

High Temperature Option:

HT - for media temperature up to 500˚F (260˚C)

See ball valve Actuator section for full description, additional information, and options.

Valve Maintenance

Repair Kits: add “**R**” to the front of valve catalog first 4 numbers for proper repair kit. (Example: **R2B8S**)

Consult your Parker Autoclave Engineers representative for pricing on repair kits. Refer to the Operation and Maintenance manual for proper maintenance procedures.

Ball Valve Dimensions - inches (mm)

	VALVE MODELS		
	2B4S	2B6S	2B8S
A	4.33 (109.99)	4.97 (126.30)	5.97 (151.64)
B	4.19 (106.49)	5.53 (140.41)	7.73 (196.46)
C	2.00 (50.80)	3.00 (76.20)	4.13 (104.78)
D	3.37 (85.55)	4.99 (126.82)	5.12 (130.04)
E	3.90 (99.02)	5.52 (140.32)	*10.25 (260.35)
F	1.13 (28.58)	1.38 (34.92)	1.76 (44.70)
G	1.50 (38.10)	2.00 (50.80)	3.00 (76.20)
H	0.75 (19.05)	1.00 (25.40)	1.50 (38.10)
J	0.43 (10.92)	0.41 (10.31)	0.50 (12.70)
K	0.28 (7.11)	0.28 (7.11)	0.28 (7.11)
L	1.91 (48.41)	2.50 (63.50)	3.09 (78.58)
Block Thickness	1.00 (25.40)	1.38 (34.92)	1.75 (44.45)

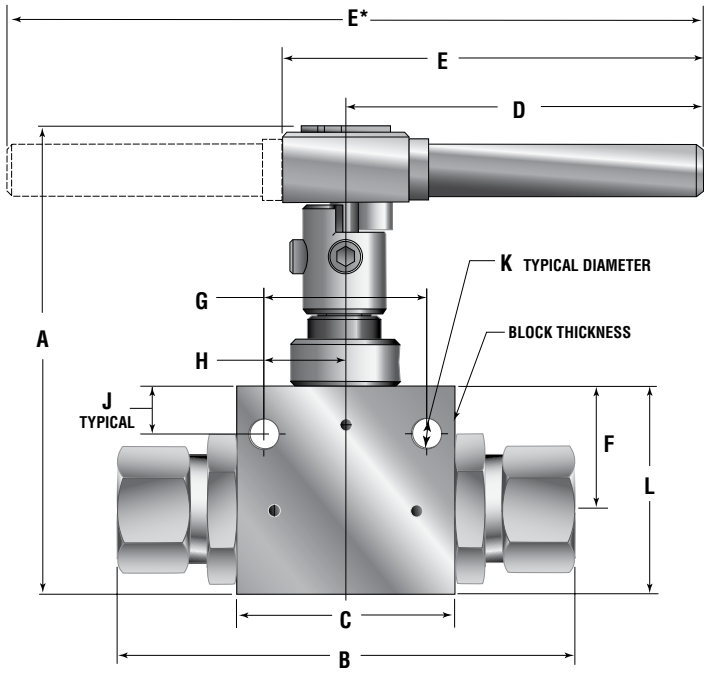

Ball Valve Panel Mounting Dimensions - inches (mm)

	VALVE MODELS		
	2B4S	2B6S	2B8S
A	1.500 (38.10)	2.000 (50.80)	3.000 (76.20)
B	0.750 (19.05)	1.000 (25.40)	1.500 (38.10)
C	1.06 (26.92)	1.50 (38.10)	1.88 (47.63)
D	0.28 (7.11)	0.28 (7.11)	0.28 (7.11)

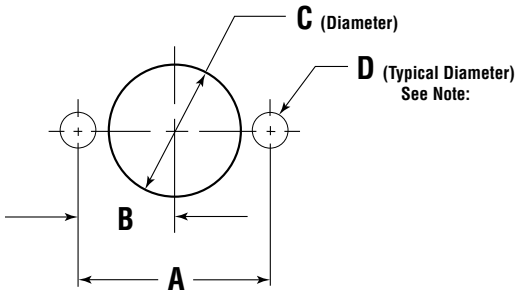

All dimensions are for reference only
and are subject to change without notice.

Note: Body mounting 1/4" - 20 thread

Ball Valves - 2-Way Series (3/4" Orifice)

Pressures to 15,000 psi (1034 bar) .750" (19.05mm) Orifice

Connection	MAWP @ Room Temperature	Minimum Orifice Inches (mm)
SF1000CX10	15,000 psi (1034 bar)	.688 (17.48)
1/2" NPT	15,000 psi (1034 bar)	.688 (17.48)
3/4" NPT	10,000 psi (690 bar)	.750 (19.05)
1" NPT	10,000 psi (690 bar)	.750 (19.05)
	Valve C_V=21	

MAWP: Maximum Allowable Working Pressure

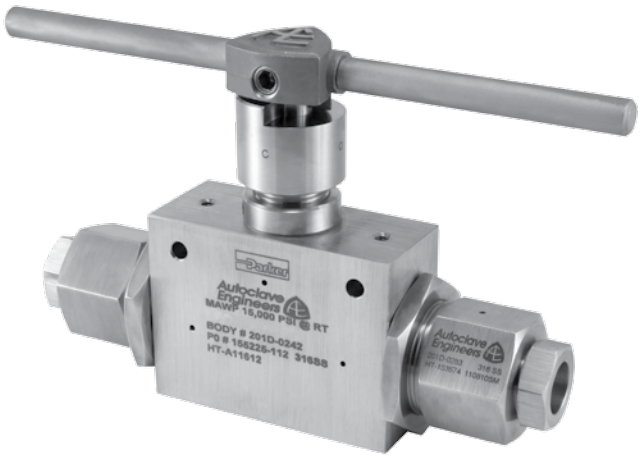

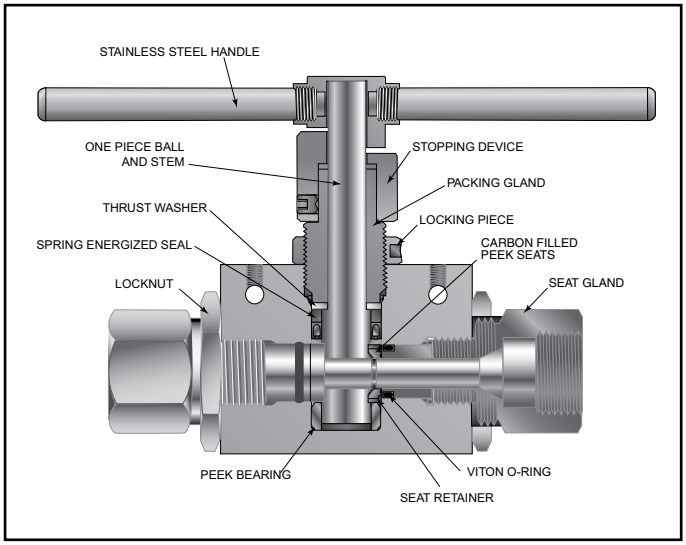

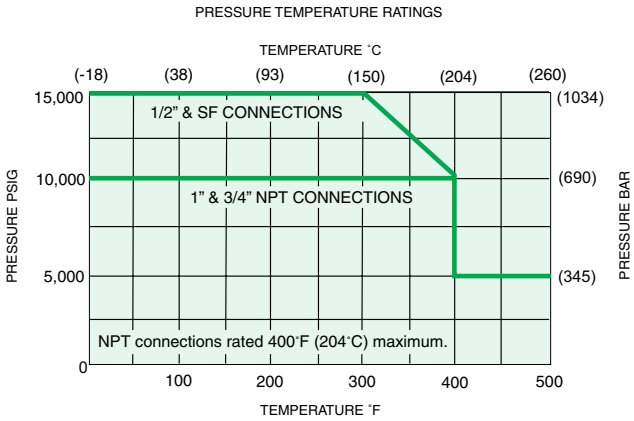

Pressure ratings are determined by the end connections chosen, see chart.

NOTE: Ball valves are not recommended for critical gas applications such as Hydrogen, Helium or other small molecular gases.

Ordering Procedure

For complete information on available end connections and material options, see next page. 2-way ball valves are furnished complete with tube or pipe connections.

Typical catalog number: **2B 12 S 15 M16**

2B	12	S	15	M16	—	XXX
Valve Series	**Ball Orifice Diameter**	**Material**	**Pressure (X 1000 psi)**	**End Connection**		**Options**
2B: 2-way	**12**-3/4" (19.05 mm)	**S** -316SS (For material options contact factory)		**M16** - SF1000CX10 (See Chart on next page)		**HT** - High Temperature (Ball Valve Acutators, see next page.)

End Connection Options

Catalog Number	End Connection Number	Connection	MAWP @ Room Temperature	Seat Gland Hex Inches(mm)
2B12S15M16	M16	SF1000CX10	15,000 psi (1034 bar)	1.88 (47.6)
2B12S15P8	P8	1/2" NPT	15,000 psi (1034 bar)	1.88 (47.6)
2B12S10P12	P12	3/4" NPT	10,000 psi (690 bar)	1.88 (47.6)
2B12S10P16	P16	1" NPT	10,000 psi (690 bar)	1.88 (47.6)

MAWP: Maximum Allowable Working Pressure

See ball valve option/details section for end connection details, material, and high temperature options.

Ball Valve Options

Valve Actuators

Consult Factory

Actuator Operating Temperature:

Pneumatic: 0˚F to 175˚F (-17˚C to 79˚C)
Electric: 0˚F to 160˚F (-17˚C to 71˚C)

Valve Maintenance

Repair Kits: add "**R**" to the front of valve catalog first 4 numbers for proper repair kit. (Example: **R2B12S**)

Consult your Parker Autoclave Engineers representative for pricing on repair kits. Refer to the Operation and Maintenance manual for proper maintenance procedures.

Ball Valve Dimensions - inches (mm)

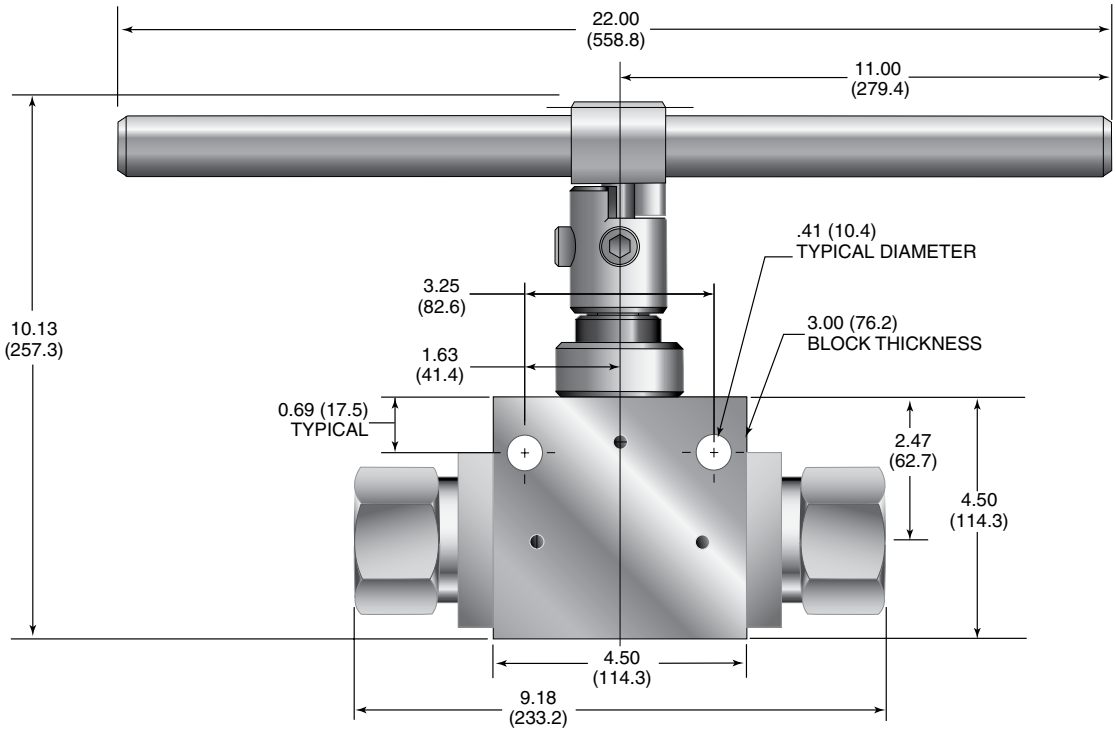

Ball Valve Panel Mounting Dimensions - inches (mm)

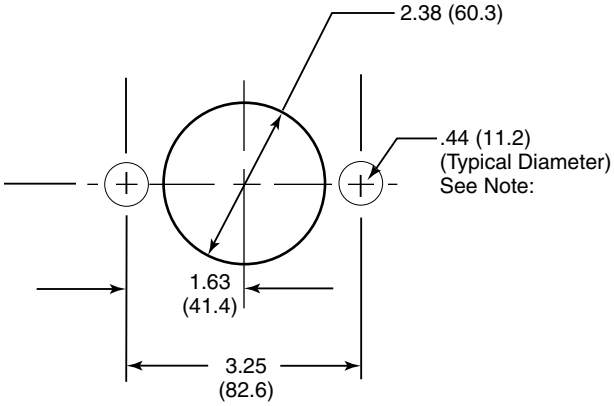

All dimensions are for reference only
and are subject to change without notice.
NOTE: Body mounting 3/8”-16 thread

Ball Valves - 2-Way Series (1" Orifice)

Pressures to 10,000 psi (690 bar) 1.000" (25.40mm) Orifice

Connection	MAWP @ Room Temperature	Minimum Orifice Inches (mm)	Valve C_V
SM1500CX10 (Male)	10,000 psi (690 bar)	.938 (23.83)	30
1" SAE (Female)	10,000 psi (690 bar)	1.00 (25.40)	34
1" NPT (Female)	10,000 psi (690 bar)	1.00 (25.40)	34

MAWP: Maximum Allowable Working Pressure

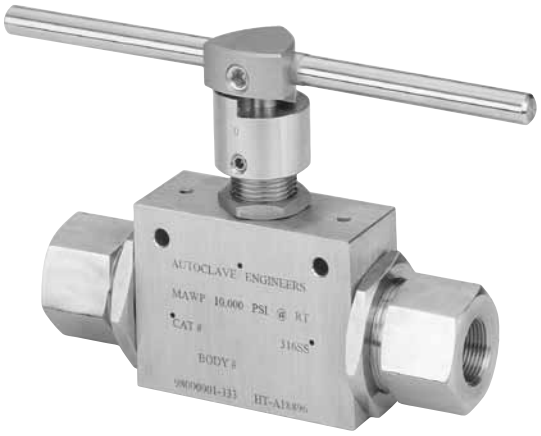

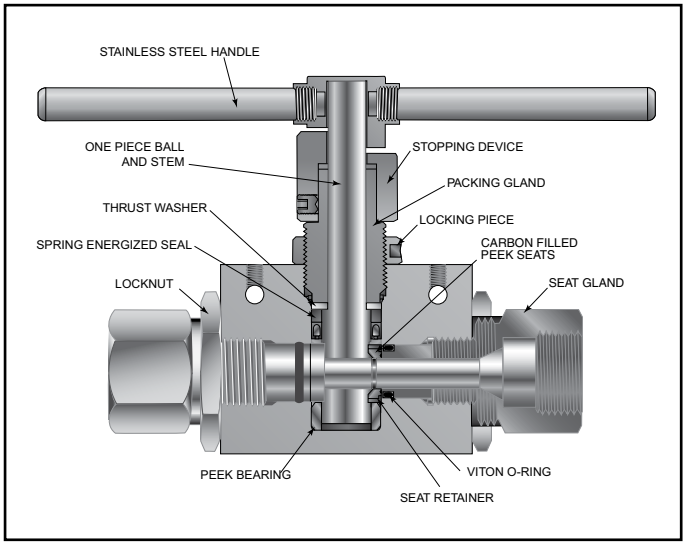

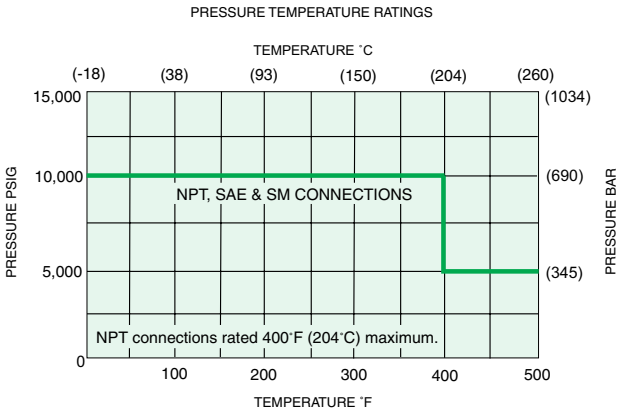

Pressure ratings are determined by the end connections chosen, see chart.

NOTE: Ball valves are not recommended for critical gas applications such as Hydrogen, Helium or other small molecular gases.

Ordering Procedure

For complete information on available end connections and material options, see next page. 2-way ball valves are furnished complete with tube or pipe connections.

Typical catalog number: **2B 16 S 10 MA24**

2B — **Valve Series**
2B: 2-way

16 — **Ball Orifice Diameter**
16-1.0" (25.40 mm)

S — **Material**
S -316SS
(For material options contact factory)

10 — **Pressure (X 1000 psi)**

MA24 — **End Connection**
MA24 - SM1500CX10
(See Chart on next page)

— **XXX** — **Options**
HT - High Temperature
(Ball Valve Acutators, see next page.)

End Connection Options

Catalog Number	End Connection Number	Connection	MAWP @ Room Temperature	Seat Gland Hex Inches(mm)
2B16S10MA24	M24	SM1500CX10 (Male)	10,000 psi (690 bar)	1.88 (47.6)*Square
2B16S10S16	S16	1" SAE (Female)	10,000 psi (690 bar)	1.88 (47.6)
2B16S10P16	P16	1" NPT (Female)	10,000 psi (690 bar)	1.88 (47.6)

MAWP: Maximum Allowable Working Pressure

See ball valve option/details section for end connection details, material, and high temperature options.

Ball Valve Options

Valve Actuators

Consult Factory

Actuator Operating Temperature:

Pneumatic: 0˚F to 175˚F (-17˚C to 79˚C)
Electric: 0˚F to 160˚F (-17˚C to 71˚C)

Valve Maintenance

Repair Kits: add "**R**" to the front of valve catalog first 4 numbers for proper repair kit. (Example: **R2B16S**)

Consult your Parker Autoclave Engineers representative for pricing on repair kits. Refer to the Operation and Maintenance manual for proper maintenance procedures.

Ball Valve Dimensions - inches (mm)

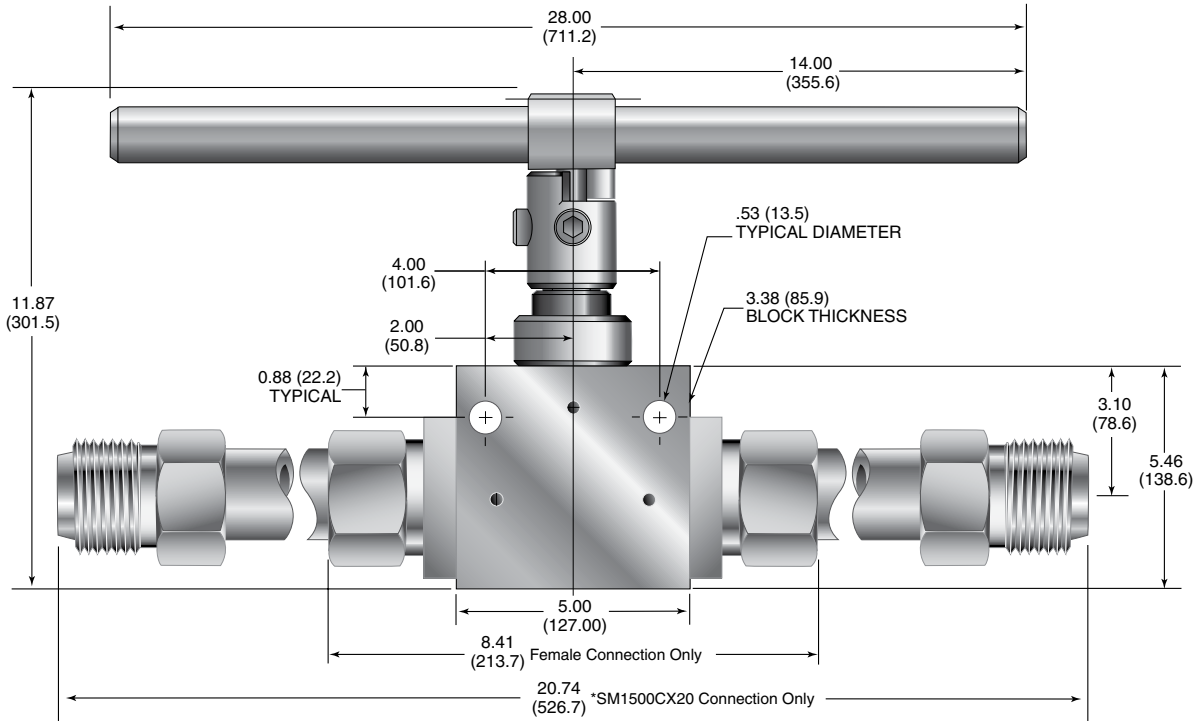

Ball Valve Panel Mounting Dimensions - inches (mm)

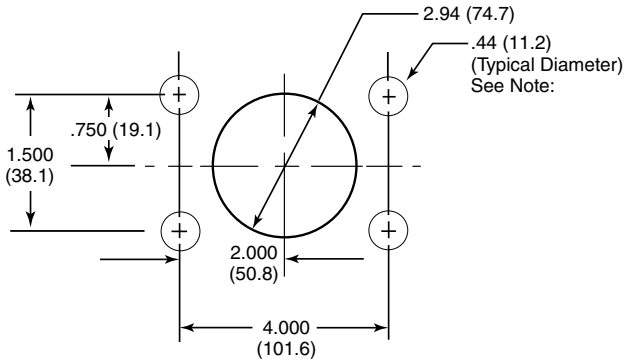

All dimensions are for reference only
and are subject to change without notice.
NOTE: Body mounting 3/8"-16 thread

WARNING

FAILURE, IMPROPER SELECTION OR IMPROPER USE OF THE PRODUCTS AND/OR SYSTEMS DESCRIBED HEREIN OR RELATED ITEMS CAN CAUSE DEATH, PERSONAL INJURY AND PROPERTY DAMAGE.

This document and other information from Parker Hannifin Corporation, its subsidiaries and authorized distributors provide product and/or system options for further investigation by users having technical expertise. It is important that you analyze all aspects of your application and review the information concerning the product or system in the current product catalog. Due to the variety of operating conditions and applications for these products or systems, the user, through its own analysis and testing, is solely responsible for making the final selection of the products and systems and assuring that all performance, safety and warning requirements of the application are met. The products described herein, including without limitation, product features, specifications, designs, availability and pricing, are subject to change by Parker Hannifin Corporation and its subsidiaries at any time without notice.

Offer of Sale

The items described in this document are available for sale by Parker Hannifin Corporation, its subsidiaries or its authorized distributors. Any sale contract entered by Parker will be governed by the provisions stated in Parker's standard terms and conditions of sale (copy available upon request).

02-0105SE January2013

Instrumentation Products Division
Autoclave Engineers Operation
8325 Hessinger Drive
Erie, Pennsylvania 16509-4679 USA
PH: 814-860-5700 FAX: 814-860-5811
www.autoclave.com

Parker Hannifin Manufacturing Ltd.
Instrumentation Products Division, Europe
Industrial Estate Whitemill
Wexford, Republic of Ireland
PH: 353 53 914 1566
FAX: 353 53 914 1582

Caution! Do not mix or interchange parts or tubing with those of other manufacturers. Doing so is unsafe and will void warranty.

Caution! Parker Autoclave Engineers Valves, Fittings and Tools are not designed to work with common commercial instrument tubing and will only work with tubing built to Parker Autoclave Engineers AES Specifications. Failure to do so will void warranty.

ISO-9001 Certified

Ball Valves

3-Way Series

Pressures to 20,000 psi (1379 bar)

Parker Autoclave Engineers high-pressure ball valves have been designed to provide superior quality for maximum performance within a variety of valve styles, sizes, and process connections. Some of the more unique design innovations include an integral one-piece trunnion mounted style ball and stem that eliminates the shear failure common in two piece designs, re-torqueable seat glands that result in longer seat life, and a low friction stem seal that reduces actuation torque and enhances cycle life.

These ball valves can also be modified to incorporate the use of special materials, seals for high temperature applications, subsea models, and valve actuators.

When it comes to high-pressure applications, these ball valves with the associated high-pressure components, provide the critical performance demanded by the high pressure market.

Flow Configuration

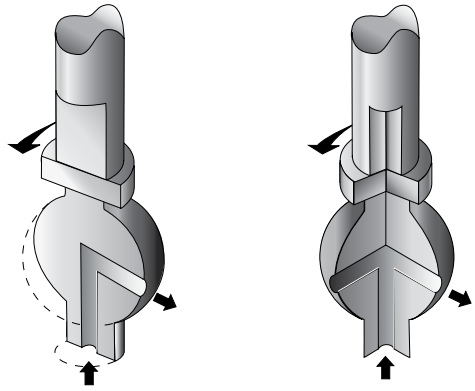

3-Way Switching 180° Turn

3-Way Crossover 90° Turn

Ball Valve Features:

- One-piece, trunnion mounted style, stem design eliminates shear failure found in two piece designs and reduces effects of side loading.
- Re-torqueable seat glands for longer seat life.
- Carbon filled PEEK seats offer excellent resistance to chemicals, heat, and wear/abrasion.
- Full-port flow path minimizes pressure drop.
- 316 cold worked stainless steel construction.
- Low friction pressure assisted graphite filled PTFE stem seal increases cycle life and reduces operating torque.
- Available in 90° turn diverter and 180° turn switching models.
- Viton o-rings for operation from 0°F (-17.8°C) to 400°F (204°C).
- Optional o-rings available for high-temperature applications.
- Optional wetted materials.
- Wide selection of tube and pipe end fittings available.
- Electric and pneumatic actuator options.

Applications:

- Laboratories
- Test Stands
- Control Panels
- Chemical Research
- Pilot Plants
- Water Blast Pumping Units
- High volume chemical injection skids.

Parker

Autoclave Engineers

www.autoclave.com

Ball Valves - 3/16" 3-Way Series

Pressures to 20,000 psi (1379 bar) .187" (4.77mm) Orifice

Connection	MAWP @ Room Temperature	Minimum Orifice inches(mm)
W125	15,000 psi (1034 bar)	.094 (2.39)
SW250	15,000 psi (1034 bar)	.128 (3.25)
SW375	15,000 psi (1034 bar)	.188 (4.77)
SW500	10,000 psi (690 bar)	.188 (4.77)
SF250CX20	20,000 psi (1379 bar)	.109 (2.77)
SF375CX20	20,000 psi (1379 bar)	.188 (4.77)
SF562CX20	20,000 psi (1379 bar)	.188 (4.77)
F250C	20,000 psi (1379 bar)	.094 (2.39)
F375C	20,000 psi (1379 bar)	.125 (3.17)
F562C	20,000 psi (1379 bar)	.188 (4.77)
1/8" NPT	15,000 psi (1034 bar)	.188 (4.77)
1/4" NPT	15,000 psi (1034 bar)	.188 (4.77)
3/8" NPT	15,000 psi (1034 bar)	.188 (4.77)
1/2" NPT	15,000 psi (1034 bar)	.188 (4.77)
	Valve C_V=.50	

MAWP: Maximum Allowable Working Pressure
C_V listed is for maximum orifice size of .188 inches only.
Consult factory for C_V of valves with reduced orifice sizes.

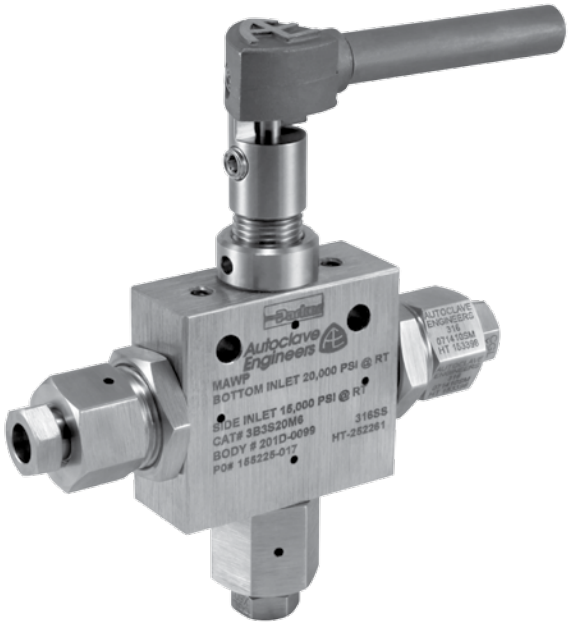

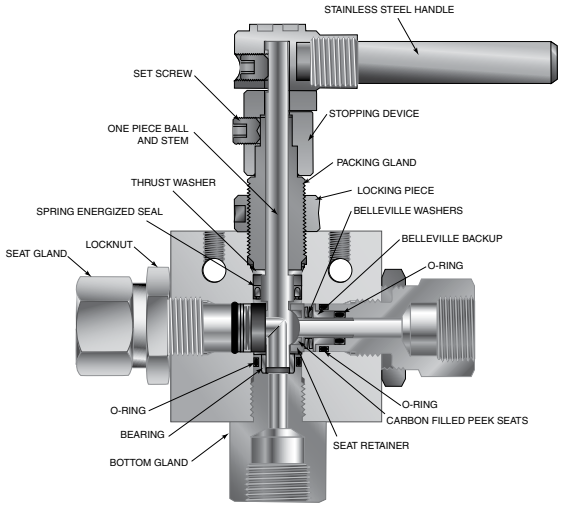

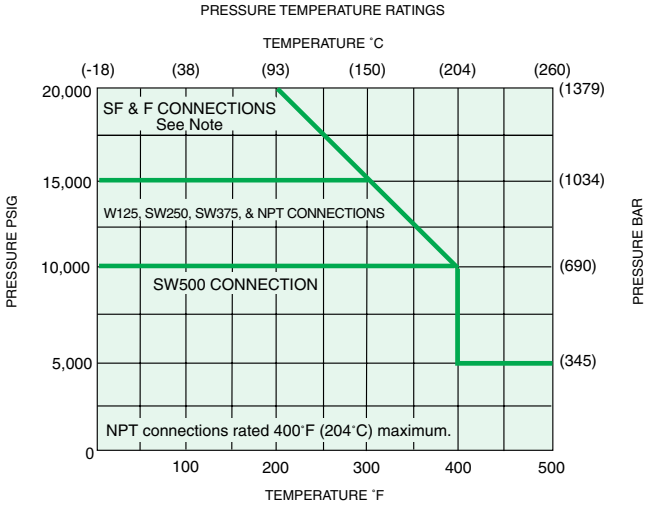

Pressure ratings are determined by the end connections chosen, see chart.
Note: Maximum side connection inlet pressure 15,000 psi (1034 bar)

NOTE: Ball valves are not recommended for critical gas applications such as Hydrogen, Helium or other small molecular gases.

Ordering Procedure

For complete information on available end connections and material options, see next page. 3-way ball valves are furnished complete with tube or pipe connections.

Typical catalog number: **3B 3 S 20 M9**

3B — **Valve Series**
3B: 3-way
3BD: 3-way diverter

3 — **Ball Orifice Diameter**
3-3/16"
(4.77 mm)

S — **Material**
S -316SS
(For material options contact factory)

20 — **Pressure (X 1000 psi)**

M9 — **End Connection**
M9 - SF562CX20
(See Chart on next page)

—

XXX — **Options**
HT - High Temperature
(Ball Valve Actuators, see next page)

All general terms and conditions of sale, including limitations of our liability, apply to all products and services sold.

End Connection Options

Catalog Number	End Connection Number	Connection	MAWP @ Room Temperature	Hex Inches(mm)
3B3S15L2 3BD3S15L2	L2	W125	15,000 psi (1034 bar)	1 (25.40)
3B3S15L4 3BD3S15L4	L4	SW250	15,000 psi (1034 bar)	1 (25.40)
3B3S15L6 3BD3S15L6	L6	SW375	15,000 psi (1034 bar)	1 (25.40)
3B3S10L8 3BD3S10L8	L8	SW500	10,000 psi (690 bar)	1 (25.40)
3B3S20M4 3BD3S20M4	M4	SF250CX20	20,000 psi (1379 bar)	1 (25.40)
3B3S20M6 3BD3S20M6	M6	SF375CX20	20,000 psi (1379 bar)	1 (25.40)
3B3S20M9 3BD3S20M9	M9	SF562CX20	20,000 psi (1379 bar)	1 (25.40)
3B3S20H4 3BD3S20H4	H4	F250C	20,000 psi (1379 bar)	1 (25.40)
3B3S20H6 3BD3S20H6	H6	F375C	20,000 psi (1379 bar)	1 (25.40)
3B3S20H9 3BD3S20H9	H9	F562C	20,000 psi (1379 bar)	1.38 (35.05)
3B3S15P2 3BD3S15P2	P2	1/8” NPT	15,000 psi (1034 bar)	1 (25.40)
3B3S15P4 3BD3S15P4	P4	1/4” NPT	15,000 psi (1034 bar)	1 (25.40)
3B3S15P6 3BD3S15P6	P6	3/8” NPT	15,000 psi (1034 bar)	1 (25.40)
3B3S15P8 3BD3S15P8	P8	1/2” NPT	15,000 psi (1034 bar)	1.38 (35.05)

See ball valve option/detail section for end connection details, material, and high temperature options.

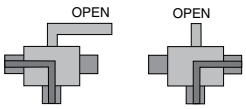

*3-Way Diverter Valve
90° Turn

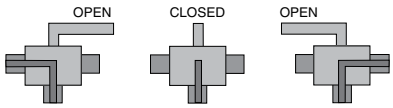

3-Way Ball Valve
180° Turn

*The Diverter Valve design permits inlet flow through the bottom port. Outlet flow may be diverted to either valve side port.

Ball Valve Options

Pneumatic Actuator:

AO - Air-to-open/Spring to close (diverter style only)
AC - Air-to-close/Spring to open (diverter style only)
AOC - Air-to-open-and-close (double action)

Electric Actuator:

EO1 - 120 volt AC 50/60 Hz
EO2 - 220 volt AC 50/60 Hz
EO3 - 24 VDC

Actuator Operating Temperature:

Pneumatic: 0˚F to 175˚F (-17˚C to 79˚C)
Electric: 0˚F to 160˚F (-17˚C to 71˚C)

High Temperature Option:

HT - for media temperature up to 500˚F (260˚C)

Valve Maintenance

Repair Kits: add “**R**” to the front of valve catalog numbers for proper repair kit. (Example: **R3B3S**)

Consult your Parker Autoclave Engineers representative for pricing on repair kits. Refer to the Operation and Maintenance manual for proper maintenance procedures.

See ball valve actuator section for full description, additional information, and options.

Ball Valves - 3/8" 3-Way Series

Pressures to 15,000 psi (1034 bar) .328" (8.33mm) Orifice

Connection	MAWP @ Room Temperature	Minimum Orifice inches(mm)
SW500	10,000 psi (690 bar)	.328 (8.33)
SF375CX20	15,000 psi (1034 bar)	.203 (5.16)
SF562CX20	15,000 psi (1034 bar)	.312 (7.92)
SF750CX20	15,000 psi (1034 bar)	.328 (8.33)
1/4" NPT	15,000 psi (1034 bar)	.328 (8.33)
3/8" NPT	15,000 psi (1034 bar)	.328 (8.33)
1/2" NPT	15,000 psi (1034 bar)	.328 (8.33)
	Valve C_V=2.1	

MAWP: Maximum Allowable Working Pressure
C_V listed is for maximum orifice size of .328 inches only.
Consult factory for C_V of valves with reduced orifice sizes.

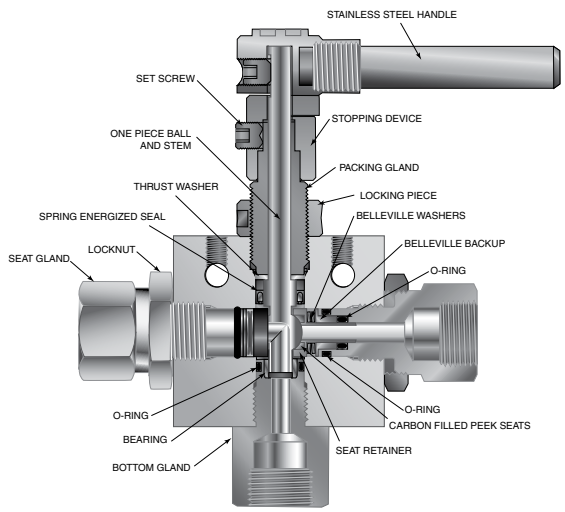

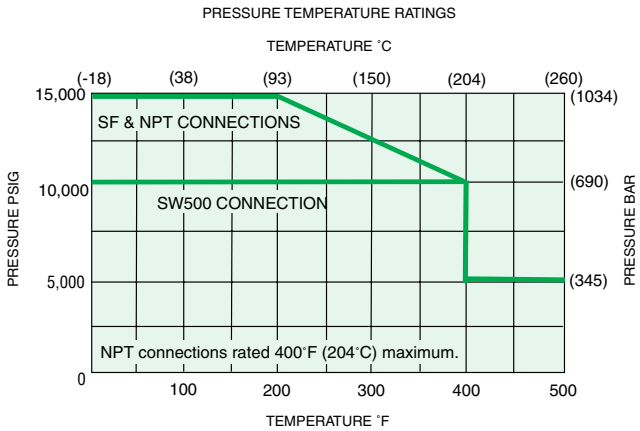

Pressure ratings are determined by the end connections chosen, see chart.
Side connection pressure not recommended.

NOTE: Ball valves are not recommended for critical gas applications such as Hydrogen, Helium or other small molecular gases.

Ordering Procedure

For complete information on available end connections and material options, see next page. 3-way ball valves are furnished complete with tube or pipe connections.

Typical catalog number: **3B 6 S 15 M9**

3B — **Valve Series**
3B: 3-way
3BD: 3-way diverter

6 — **Ball Orifice Diameter**
6-3/8" (9.52 mm)

S — **Material**
S -316SS
(For material options contact factory)

15 — **Pressure (X 1000 psi)**

M9 — **End Connection**
M9 - SF562CX20
(See Chart on next page)

—

XXX — **Options**
HT - High Temperature
(Ball Valve Actuators, see next page)

End Connection Options

Catalog Number	End Connection Number	Connection	MAWP @ Room Temperature	Hex Inches(mm)
3B6S10L8 3BD6S10L8	L8	SW500	10,000 psi (690 bar)	1.38 (35.05)
3B6S15M6 3BD6S15M6	M6	SF375CX20	15,000 psi (1034 bar)	1.38 (35.05)
3B6S15M9 3BD6S15M9	M9	SF562CX20	15,000 psi (1034 bar)	1.38 (35.05)
3B6S15M12 3BD6S15M12	M12	SF750CX20	15,000 psi (1034 bar)	1.38 (35.05)
3B6S15P4 3BD6S15P4	P4	1/4” NPT	15,000 psi (1034 bar)	1.38 (35.05)
3B6S15P6 3BD6S15P6	P6	3/8” NPT	15,000 psi (1034 bar)	1.38 (35.05)
3B6S15P8 3BD6S15P8	P8	1/2” NPT	15,000 psi (1034 bar)	1.38 (35.05)

MAWP: Maximum Allowable Working Pressure

See ball valve option/details section for end connection details, material, and high temperature options.

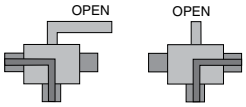

*3-Way Diverter Valve
90° Turn

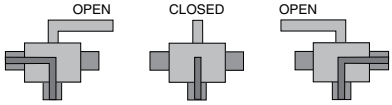

3-Way Ball Valve
180° Turn

*The Diverter Valve design permits inlet flow through the bottom port. Outlet flow may be diverted to either valve side port.

Ball Valve Options

Pneumatic Actuator:

AO - Air-to-open/Spring to close (diverter style only)
AC - Air-to-close/Spring to open (diverter style only)
AOC - Air-to-open-and-close (double action)

Electric Actuator:

EO1 - 120 volt AC 50/60 Hz
EO2 - 220 volt AC 50/60 Hz
EO3 - 24 VDC

Actuator Operating Temperature:

Pneumatic: 0˚F to 175˚F (-17˚C to 79˚C)
Electric: 0˚F to 160˚F (-17˚C to 71˚C)

High Temperature Option:

HT - for media temperature up to 500˚F (260˚C)

Valve Maintenance

Repair Kits: add “**R**” to the front of valve catalog numbers for proper repair kit.

(Example: **R3B6S**)

Consult your Parker Autoclave Engineers representative for pricing on repair kits. Refer to the Operation and Maintenance manual for proper maintenance procedures.

See ball valve actuator section for full description, additional information, and options.

Ball Valves - 1/2" 3-Way Series

Pressures to 10,000 psi (690 bar) .500" (12.7mm) Orifice

Connection	MAWP @ Room Temperature	Minimum Orifice inches(mm)
SF750CX20	10,000 psi (690 bar)	.500 (12.70)
SF1000CX20	10,000 psi (690 bar)	.500 (12.70)
3/4" NPT	10,000 psi (690 bar)	.500 (12.70)
1" NPT	10,000 psi (690 bar)	.500 (12.70)
	Valve C_V=4.4	

MAWP: Maximum Allowable Working Pressure

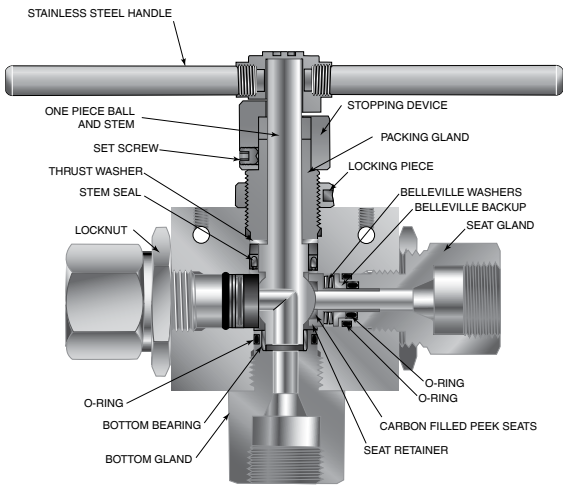

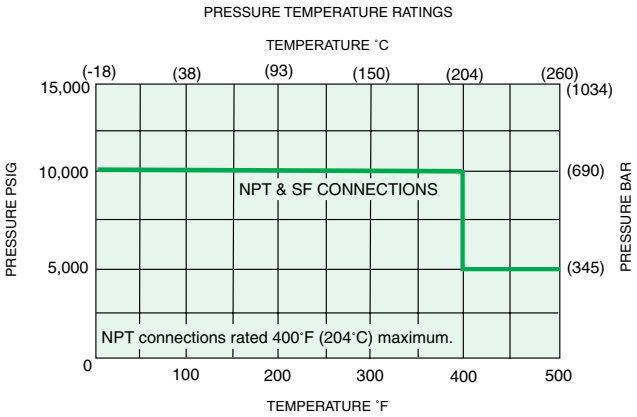

Pressure ratings are determined by the end connections chosen, see chart.
Note: Maximum side connection inlet pressure 10,000 psi (690 bar)

NOTE: Ball valves are not recommended for critical gas applications such as Hydrogen, Helium or other small molecular gases.

Ordering Procedure

For complete information on available end connections and material options, see next page. 3-way ball valves are furnished complete with tube or pipe connections.

Typical catalog number: **3B 8 S 10 M12**

3B — **Valve Series**
3B: 3-way
3BD: 3-way diverter

8 — **Ball Orifice Diameter**
8-1/2" (12.7 mm)

S — **Material**
S -316SS
(For material options contact factory)

10 — **Pressure (X 1000 psi)**

M12 — **End Connection**
M12 - SF750CX20
(See Chart on next page)

—

XXX — **Options**
HT - High Temperature
(Ball Valve Actuators, see next page)

All general terms and conditions of sale, including limitations of our liability, apply to all products and services sold.

End Connection Options

Catalog Number	End Connection Number	Connection	MAWP @ Room Temperature	Hex Inches(mm)
3B8S10M12 3BD8S10M12	M12	SF750CX20	10,000 psi (690 bar)	1.75 (44.5)
3B8S10M16 3BD8S10M16	M16	SF1000CX20	10,000 psi (690 bar)	1.75 (44.5)
3B8S10P12 3BD8S10P12	P12	3/4” NPT	10,000 psi (690 bar)	1.75 (44.5)
3B8S10P16 3BD8S10P16	P16	1” NPT	10,000 psi (690 bar)	1.75 (44.5)

MAWP: Maximum Allowable Working Pressure

See ball valve options for end connection details, material, and high temperature options.

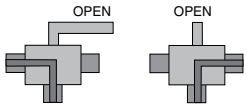

*3-Way Diverter Valve
90° Turn

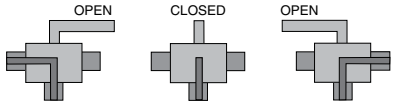

3-Way Ball Valve
180° Turn

*The Diverter Valve design permits inlet flow through the bottom port. Outlet flow may be diverted to either valve side port.

Ball Valve Options

Pneumatic Actuator:

AO - Air-to-open/Spring to close (diverter style only)
AC-Air-to-open/Spring to close (diverter style only)
AOC - Air-to-open-and-close (double action)

Electric Actuator:

EO1 - 120 volt AC 50/60 Hz
EO2 - 220 volt AC 50/60 Hz
E03 - 24 VDC

Actuator Operating Temperature:

Pneumatic: 0˚F to 175˚F (-17˚C to 79˚C)
Electric: 0˚F to 160˚F (-17˚C to 71˚C)

High Temperature Option:

HT - for media temperature up to 500˚F (260˚C)

Valve Maintenance

Repair Kits: add “**R**” to the front of valve catalog numbers for proper repair kit. (Example: **R3B8S**)

Consult your Parker Autoclave Engineers representative for pricing on repair kits. Refer to the Operation and Maintenance manual for proper maintenance procedures.

See ball valve actuator section for full description, additional information, and options.

Ball Valve Dimensions - inches (mm)

	VALVE MODELS		
	3B3S/3BD3S	3B6S/3BD6S	3B8S/3BD8S
A	5.64 (143.35)	6.55 (166.37)	7.83 (198.79)
B	4.72 (119.94)	5.74 (145.79)	7.77 (197.36)
C	2.50 (63.50)	3.00 (76.20)	4.13 (104.78)
D	3.37 (85.55)	4.99 (126.82)	5.12 (130.04)
E	3.90 (99.02)	5.52 (140.32)	10.25 (260.35)
F	1.13 (28.58)	1.38 (34.93)	1.66 (42.16)
G	1.50 (38.10)	2.00 (50.80)	3.00 (76.20)
H	0.75 (19.05)	1.00 (25.40)	1.50 (38.10)
J	0.43 (10.92)	0.41 (10.31)	0.50 (12.70)
K	0.28 (7.11)	0.28 (7.11)	0.28 (7.11)
L	2.25 (57.15)	2.88 (73.03)	3.34 (84.94)
M	0.97 (24.64)	1.19 (30.22)	1.70 (43.18)
Block Thickness	1.00 (25.40)	1.38 (34.92)	1.75 (44.45)

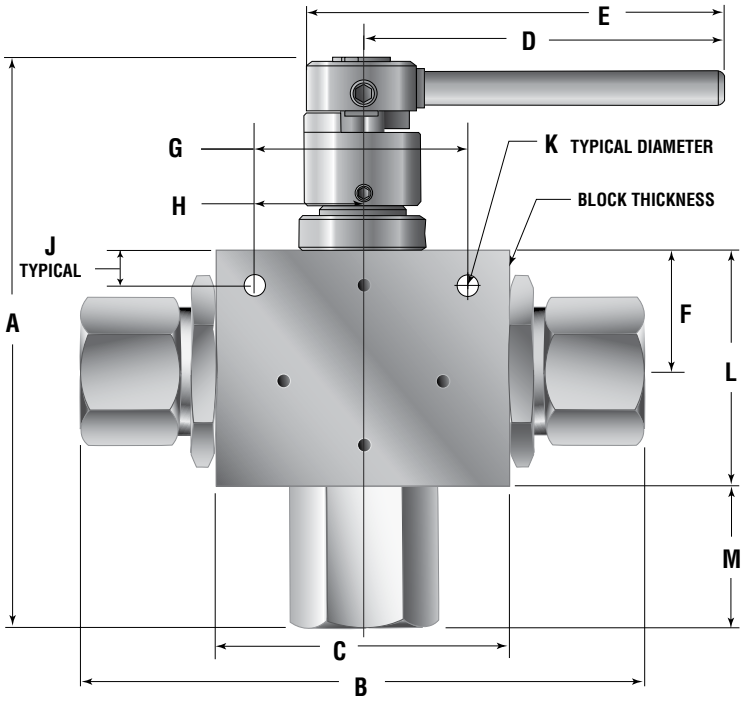

Ball Valve Panel Mounting Dimensions - inches (mm)

	VALVE MODELS		
	3B3S/3BD3S	3B6S/3BD6S	3B8S/3BD8S
A	1.500 (38.10)	2.000 (50.80)	3.000 (76.20)
B	0.750 (19.05)	1.000 (25.40)	1.500 (38.10)
C	1.06 (26.92)	1.50 (38.10)	1.88 (47.63)
D	0.28 (7.11)	0.28 (7.11)	0.28 (7.11)

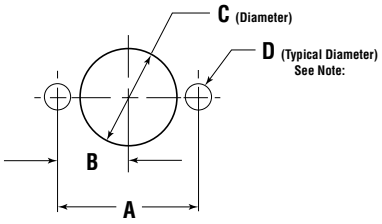

All dimensions are for reference only and are subject to change without notice.
Note: Body mounting 1/4" - 20 thread

WARNING

FAILURE, IMPROPER SELECTION OR IMPROPER USE OF THE PRODUCTS AND/OR SYSTEMS DESCRIBED HEREIN OR RELATED ITEMS CAN CAUSE DEATH, PERSONAL INJURY AND PROPERTY DAMAGE. This document and other information from Parker Hannifin Corporation, its subsidiaries and authorized distributors provide product and/or system options for further investigation by users having technical expertise. It is important that you analyze all aspects of your application and review the information concerning the product or system in the current product catalog. Due to the variety of operating conditions and applications for these products or systems, the user, through its own analysis and testing, is solely responsible for making the final selection of the products and systems and assuring that all performance, safety and warning requirements of the application are met. The products described herein, including without limitation, product features, specifications, designs, availability and pricing, are subject to change by Parker Hannifin Corporation and its subsidiaries at any time without notice.

Offer of Sale

The items described in this document are available for sale by Parker Hannifin Corporation, its subsidiaries or its authorized distributors. Any sale contract entered by Parker will be governed by the provisions stated in Parker's standard terms and conditions of sale (copy available upon request).

02-0106SE January2013

Instrumentation Products Division
Autoclave Engineers Operation
8325 Hessinger Drive
Erie, Pennsylvania 16509-4679 USA
PH: 814-860-5700 FAX: 814-860-5811
www.autoclave.com

Parker Hannifin Manufacturing Ltd.
Instrumentation Products Division, Europe
Industrial Estate Whitemill
Wexford, Republic of Ireland
PH: 353 53 914 1566
FAX: 353 53 914 1582

Caution! Do not mix or interchange parts or tubing with those of other manufacturers. Doing so is unsafe and will void warranty.

Caution! Parker Autoclave Engineers Valves, Fittings and Tools are not designed to work with common commercial instrument tubing and will only work with tubing built to Parker Autoclave Engineers AES Specifications. Failure to do so will void warranty.

ISO-9001 Certified

Ball Valves

4-Way Series

Pressures to 10,000 psi (690 bar)

Parker Autoclave Engineers high-pressure ball valves have been designed to provide superior quality for maximum performance within a variety of valve styles, sizes, and process connections. Some of the more unique design innovations include an integral one-piece trunnion mounted style ball and stem that eliminates the shear failure common in two piece designs, re-torqueable seat glands that result in longer seat life, and a low friction stem seal that reduces actuation torque and enhances cycle life.

These ball valves can also be modified to incorporate the use of special materials, seals for high temperature applications, subsea models, and valve actuators.

When it comes to high-pressure applications, these ball valves with the associated high-pressure components, provide the critical performance demanded by the high pressure market.

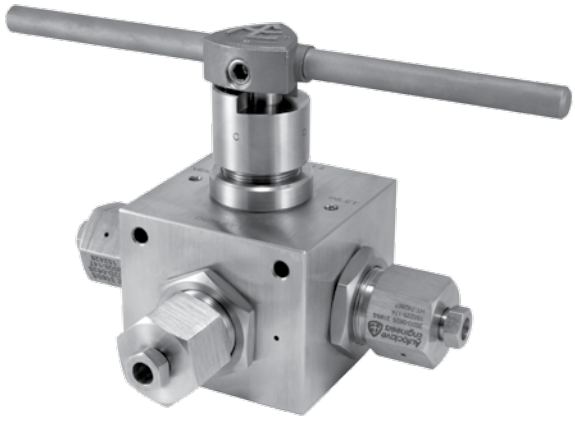

Flow Configuration

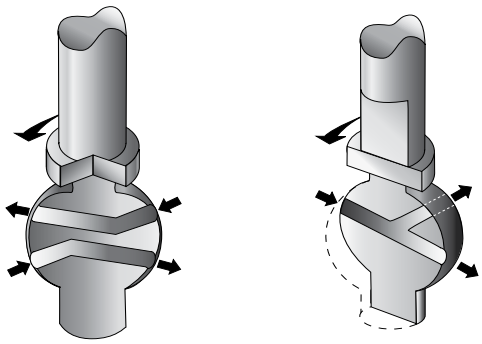

4-Way Crossover 90° Turn

4-Way Switching 180° Turn

Ball Valve Features:

- One-piece, trunnion mounted style, stem design eliminates shear failure found in two piece designs and reduces the effects of side loading.
- Re-torqueable seat glands for longer seat life.
- Carbon filled PEEK seats offer excellent resistance to chemicals, heat, and wear/abrasion.
- Full-port flow path minimizes pressure drop.
- 316 cold worked stainless steel construction.
- Low friction pressure assisted graphite filled PTFE stem seal increases cycle life and reduces operating torque.
- Quarter turn crossover, and the half turn four way switching models available.
- Viton o-rings for operation from 0°F (-17.8°C) to 400°F (204°C).
- Optional o-rings available for high-temperature applications.
- Optional wetted materials.
- Wide selection of tube and pipe end fittings available.
- Electric and pneumatic actuator options.

Applications:

- Laboratories
- Test Stands
- Control Panels
- Chemical Research
- Pilot Plants
- Water Blast Pumping Unit
- High volume chemical injection skids.

Parker

Autoclave Engineers®

www.autoclave.com

Ball Valves - 4-Way Series (3/8" Orifice)

Pressures to 10,000 psi (690 bar) .375" (9.52mm) Orifice

Connection	MAWP @ Room Temperature	Minimum Orifice inches(mm)
SW500	10,000 psi (690 bar)	.375 (9.52)
SF375CX20	10,000 psi (690 bar)	.203 (5.16)
SF562CX20	10,000 psi (690 bar)	.312 (7.92)
SF750CX20	10,000 psi (690 bar)	.375 (9.52)
1/4" NPT	10,000 psi (690 bar)	.375 (9.52)
3/8" NPT	10,000 psi (690 bar)	.375 (9.52)
1/2" NPT	10,000 psi (690 bar)	.375 (9.52)
	Valve C_V=2.5	

MAWP: Maximum Allowable Working Pressure

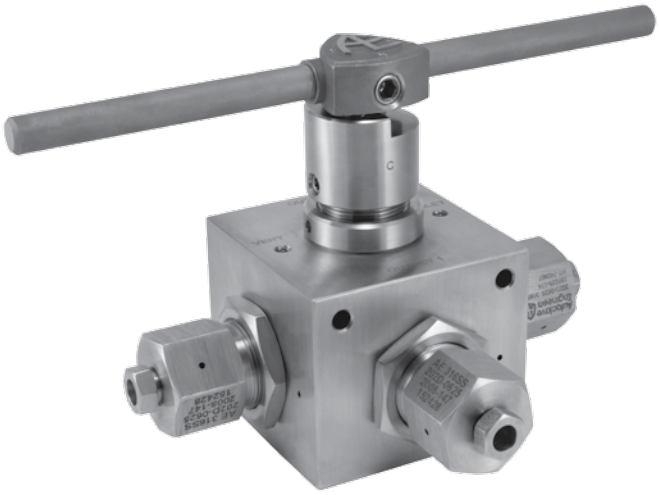

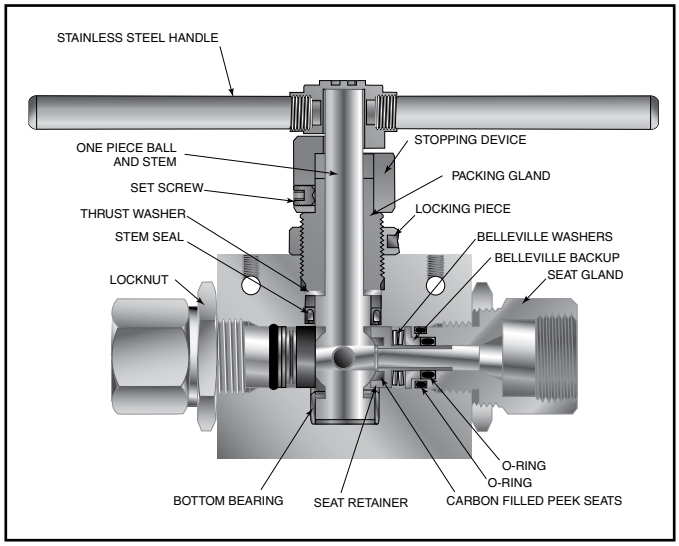

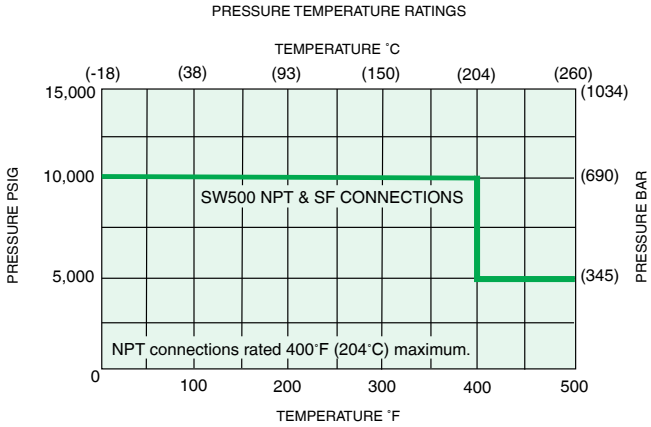

Pressure ratings are determined by the end connections chosen, see chart.

NOTE: Ball valves are not recommended for critical gas applications such as Hydrogen, Helium or other small molecular gases.

Ordering Procedure

For complete information on available end connections and material options, see next page. 4-way ball valves are furnished complete with tube or pipe connections.

Typical catalog number: **4B 6 S 10 M9**

4B — **Valve Series**
4B: 4-way crossover
4BS: 4-way switching

6 — **Ball Orifice Diameter**
6-3/8" (9.52 mm)

S — **Material**
S -316SS
(For material options contact factory)

10 — **Pressure (X 1000 psi)**

M9 — **End Connection**
M9 - SF562CX20
(See Chart on next page)

— **XXX** — **Options**
HT - High Temperature
(Ball Valve Actuators, see next page)

End Connection Options

Catalog Number	End Connection Number	Connection	MAWP @ Room Temperature	Hex Inches(mm)
4B6S10L8 4BS6S10L8	L8	SW500	10,000 psi (690 bar)	1.38 (35.05)
4B6S10M6 4BS6S10M6	M6	SF375CX20	10,000 psi (690 bar)	1.38 (35.05)
4B6S10M9 4BS6S10M9	M9	SF562CX20	10,000 psi (690 bar)	1.38 (35.05)
4B6S10M12 4BS6S10M12	M12	SF750CX20	10,000 psi (690 bar)	1.38 (35.05)
4B6S10P4 4BS6S10P4	P4	1/4” NPT	10,000 psi (690 bar)	1.38 (35.05)
4B6S10P6 4BS6S10P6	P6	3/8” NPT	10,000 psi (690 bar)	1.38 (35.05)
4B6S10P8 4BS6S10P8	P8	1/2” NPT	10,000 psi (690 bar)	1.38 (35.05)

MAWP: Maximum Allowable Working Pressure

See ball valve option/details section for end connection details, material, and high temperature options.

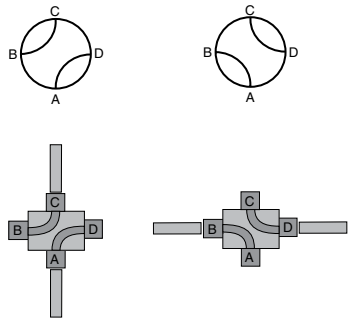

4-Way Crossover
90° Turn

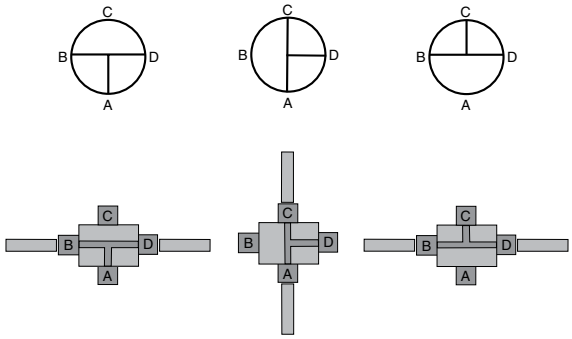

4-Way Switching
180° Turn
(supplied with "D" port plugged)

Ball Valve Options

Pneumatic Actuator:

AO - Air-to-open/Spring to close
AC - Air-to-close/Spring to open
AOC - Air-to-open-and-close (double action)

Electric Actuator:

EO1 - 120 volt AC 50/60 Hz
EO2 - 220 volt AC 50/60 Hz
EO3 - 24 VDC

Actuator Operating Temperature:

Pneumatic: 0˚F to 175˚F (-17˚C to 79˚C)
Electric: 0˚F to 160˚F (-17˚C to 71˚C)

Note: Consult factory for additional actuator information.

High Temperature Option: HT for media temperatures up to 500°F (260°)
HT - for media temperature up to 500˚F (260˚C)

Valve Maintenance

Repair Kits: add “**R**” to the front of valve catalog first 4 (5 for switching) numbers for proper repair kit.
(Example: **R4B6S**)

Consult your Parker Autoclave Engineers representative for pricing on repair kits. Refer to the Operation and Maintenance manual for proper maintenance procedures.

Ball Valve Dimensions - inches (mm)

VALVE MODELS	
4B6S/4BS6S	
A	5.81 (147.57)
B	6.79 (172.47)
C	3.50 (88.90)
D	5.13 (130.18)
E	10.25 (260.35)
F	1.63 (41.28)
G	2.63 (66.68)
H	1.13 (33.34)
J	0.41 (10.32)
K	0.28 (7.11)
L	2.97 (75.39)
Block Thickness	3.50 (88.90)

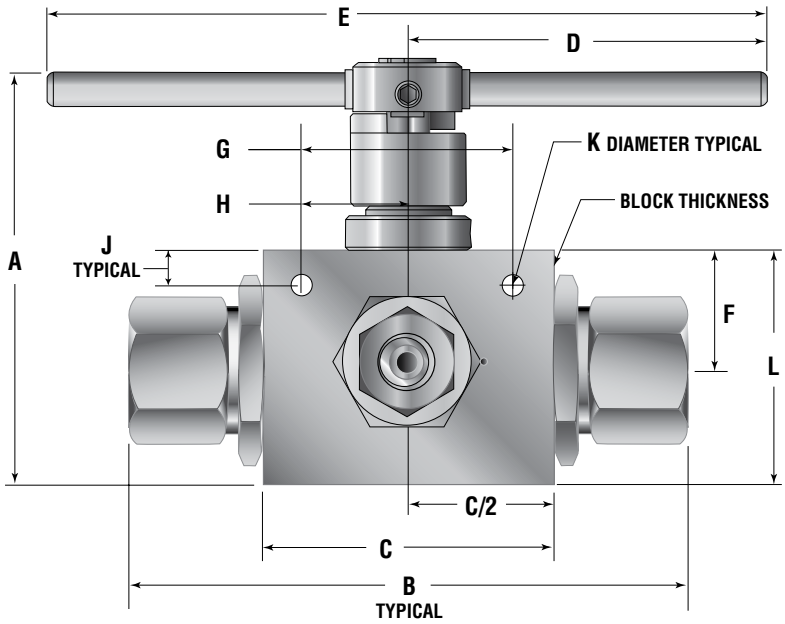

Ball Valve Panel Mounting Dimensions - inches (mm)

VALVE MODELS	
4B6S/4BS6S	
A	2.63 (66.68)
B	1.31 (33.34)
C	1.88 (47.63)
D	0.28 (7.11)

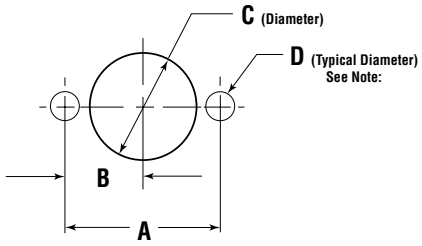

All dimensions are for reference only
and are subject to change without notice.

Note: Body mounting 1/4" - 20 threads

WARNING

FAILURE, IMPROPER SELECTION OR IMPROPER USE OF THE PRODUCTS AND/OR SYSTEMS DESCRIBED HEREIN OR RELATED ITEMS CAN CAUSE DEATH, PERSONAL INJURY AND PROPERTY DAMAGE.
This document and other information from Parker Hannifin Corporation, its subsidiaries and authorized distributors provide product and/or system options for further investigation by users having technical expertise. It is important that you analyze all aspects of your application and review the information concerning the product or system in the current product catalog. Due to the variety of operating conditions and applications for these products or systems, the user, through its own analysis and testing, is solely responsible for making the final selection of the products and systems and assuring that all performance, safety and warning requirements of the application are met. The products described herein, including without limitation, product features, specifications, designs, availability and pricing, are subject to change by Parker Hannifin Corporation and its subsidiaries at any time without notice.

Offer of Sale

The items described in this document are available for sale by Parker Hannifin Corporation, its subsidiaries or its authorized distributors. Any sale contract entered by Parker will be governed by the provisions stated in Parker's standard terms and conditions of sale (copy available upon request).

02-0107SE January2013

Instrumentation Products Division
Autoclave Engineers Operation
8325 Hessinger Drive
Erie, Pennsylvania 16509-4679 USA
PH: 814-860-5700 FAX: 814-860-5811
www.autoclave.com

Parker Hannifin Manufacturing Ltd.
Instrumentation Products Division, Europe
Industrial Estate Whitemill
Wexford, Republic of Ireland
PH: 353 53 914 1566
FAX: 353 53 914 1582

Caution! Do not mix or interchange parts or tubing with those of other manufacturers. Doing so is unsafe and will void warranty.

Caution! Parker Autoclave Engineers Valves, Fittings and Tools are not designed to work with common commercial instrument tubing and will only work with tubing built to Parker Autoclave Engineers AES Specifications. Failure to do so will void warranty.

ISO-9001 Certified

Ball Valves

Double Block and Bleed

6DB Series

Pressures to 15,000 psi (1035 bar)

Parker Autoclave Engineers series 6DB double block valve is a two-stem ball valve providing an economical and convenient method of blocking and bleeding in applications such as pressure monitoring and test, chemical injection and drain line isolation. This full port quarter turn double ball valve is designed for operation up to 15,000 psi (1034 bar).

Double Block and Bleed Features:

- One piece, trunnion mounted stem design eliminates shear failure and reduces the effects of side loading found in two piece designs.
- Re-torqueable seat glands for longer seat life.
- Carbon filled PEEK seats offer excellent resistance to chemicals, heat and wear/abrasion.
- Vee-stem vent valve.
- Full-port flow path minimizes pressure drop.
- 316 cold worked stainless steel construction.
- Low friction pressure assisted graphite filled PTFE stem seal increases cycle life and reduces operating torque.
- Quarter turn from open to close with positive stop.
- Viton o-rings for operation from 0°F (-17.8°C) to 400°F (204°C).

Parker Autoclave Engineers valves are complemented by a complete line of fittings, tubings and accessories. The 6DB Series is available with various connections and options.

Parker

Autoclave Engineers®

www.autoclave.com

Ball Valves - 6DB Series

Pressures to 15,000 psi (1034 bar) .328" (8.33mm) Orifice

Connection	MAWP @ Room Temperature	Minimum Orifice inches(mm)
SW500	10,000 psi (690 bar)	.328 (8.33)
SF375CX20	15,000 psi (1034 bar)	.203 (5.16)
SF562CX20	15,000 psi (1034 bar)	.312 (7.92)
SF750CX20	15,000 psi (1034 bar)	.328 (8.33)
1/4" NPT	15,000 psi (1034 bar)	.328 (8.33)
3/8" NPT	15,000 psi (1034 bar)	.328 (8.33)
1/2" NPT	15,000 psi (1034 bar)	.328 (8.33)
	Valve C_V=2.3	

MAWP: Maximum Allowable Working Pressure
C_V calculated with both ball valves open and the needle valve closed.
C_V listed is for maximum orifice size of .328 inches only.
Consult factory for C_V of valves with reduced orifice sizes.

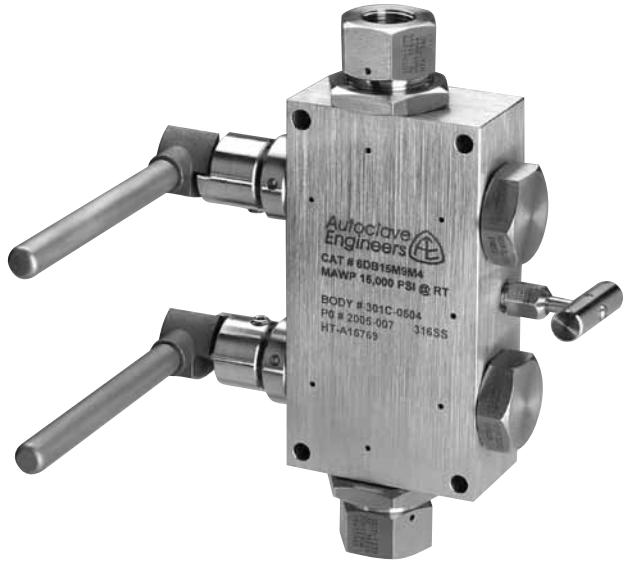

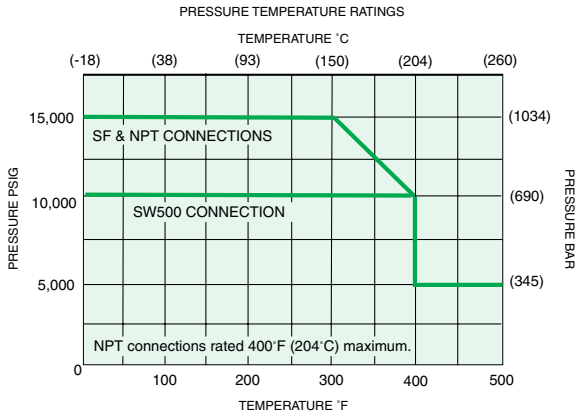

Pressure ratings are determined by the end connections chosen, see chart.

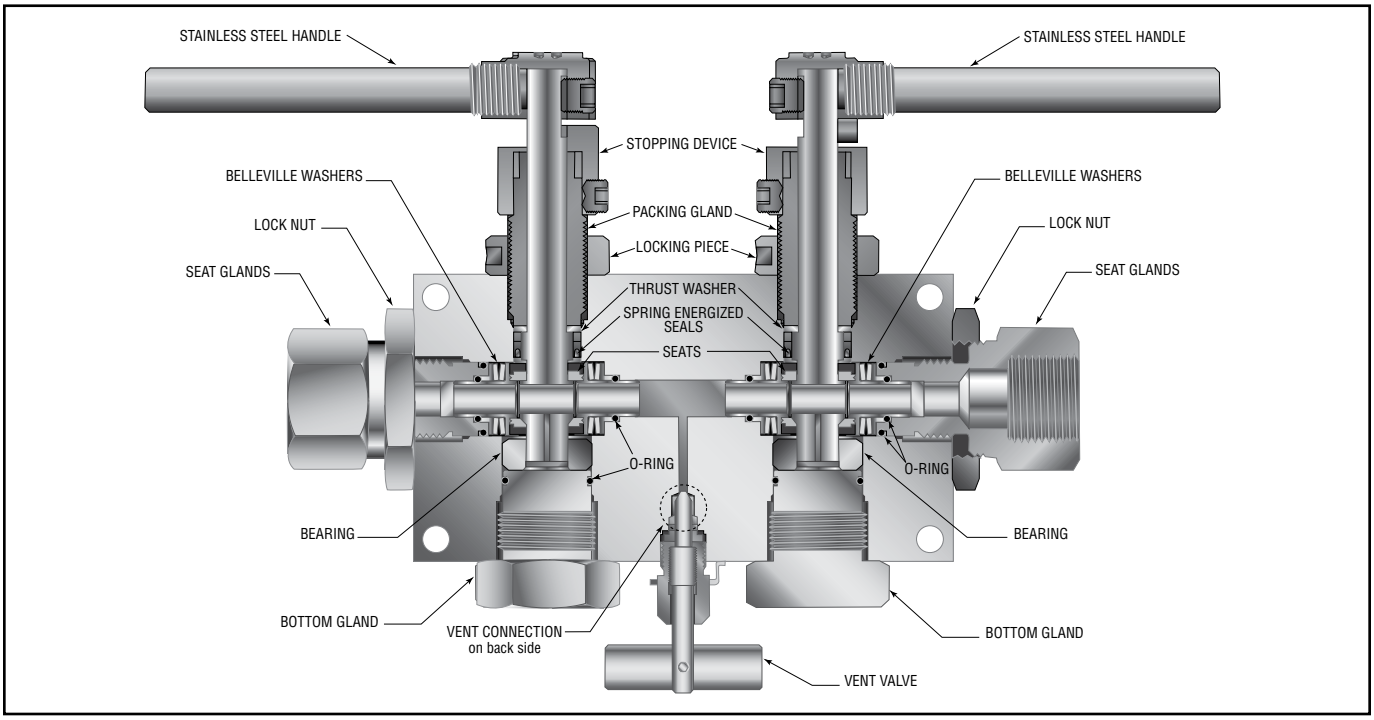

NOTE: Ball valves are not recommended for critical gas applications such as Hydrogen, Helium or other small molecular gases.

Ordering Procedure

For complete information on available end connections, see end connections options below. 6DB Series ball valves are furnished complete with tube or pipe connections.

Typical catalog number: **6DB 15 M9 M4 -XXX**

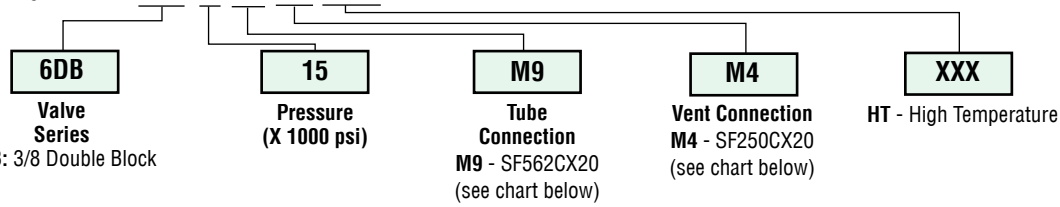

Connection Options

Catalog Number	Tube Connection Number	Connection	MAWP @ Room Temperature	Hex Inches(mm)	Vent Connection Number	Vent Connection
6DB10L8P4	L8	SW500	10,000 psi (690 bar)	1.38 (35.05)	P4	1/4" NPT
6DB15M4M4	M4	SF250CX20	15,000 psi (1034 bar)	1.38 (35.05)	M4	SF250CX20
6DB15M6M4	M6	SF375CX20	15,000 psi (1034 bar)	1.38 (35.05)	M4	SF250CX20
6DB15M9M4	M9	SF562CX20	15,000 psi (1034 bar)	1.38 (35.05)	M4	SF250CX20
6DB15M12M4	M12	SF750CX20	15,000 psi (1034 bar)	1.38 (35.05)	M4	SF250CX20
6DB15M9P4	M9	SF562CX20	15,000 psi (1034 bar)	1.38 (35.05)	P4	1/4" NPT
6DB15M16P4	M16	SF1000CX20	15,000 psi (1034 bar)	1.75 (44.45)	P4	1/4" NPT
6DB15P4P4	P4	1/4" NPT	15,000 psi (1034 bar)	1.38 (35.05)	P4	1/4" NPT
6DB15P6P4	P6	3/8" NPT	15,000 psi (1034 bar)	1.38 (35.05)	P4	1/4" NPT
6DB15P8P4	P8	1/2" NPT	15,000 psi (1034 bar)	1.38 (35.05)	P4	1/4" NPT

MAWP: Maximum Allowable Working Pressure

Ball Valve Options

High Temperature Option:
HT - for media temperature up to 500˚F (260˚C)

See ball valve options/details for full description, connection details and high temperature options.

For material options consult factory.

Valve Maintenance

Consult your Parker Autoclave Engineers representative for pricing on repair kits. Refer to the Operation and Maintenance manual for proper maintenance procedures.

Ball Valve Dimensions - inches (mm)

VALVE MODEL 6DB	
A	7.14 (181.36)
B	8.81 (223.77)
C	6.00 (152.40)
D	1.50 (38.10)
E	12.94 (328.68)
F	1.38 (34.92)
G	5.00 (127.00)
H	3.00 (76.2)
J	0.41 (10.30)
K	0.28 (7.14)
L	3.19 (81.03)
M	2.38 (60.40)
N	0.65 (16.51)
O	0.50 (12.70)
Block Thickness	1.75 (44.45)

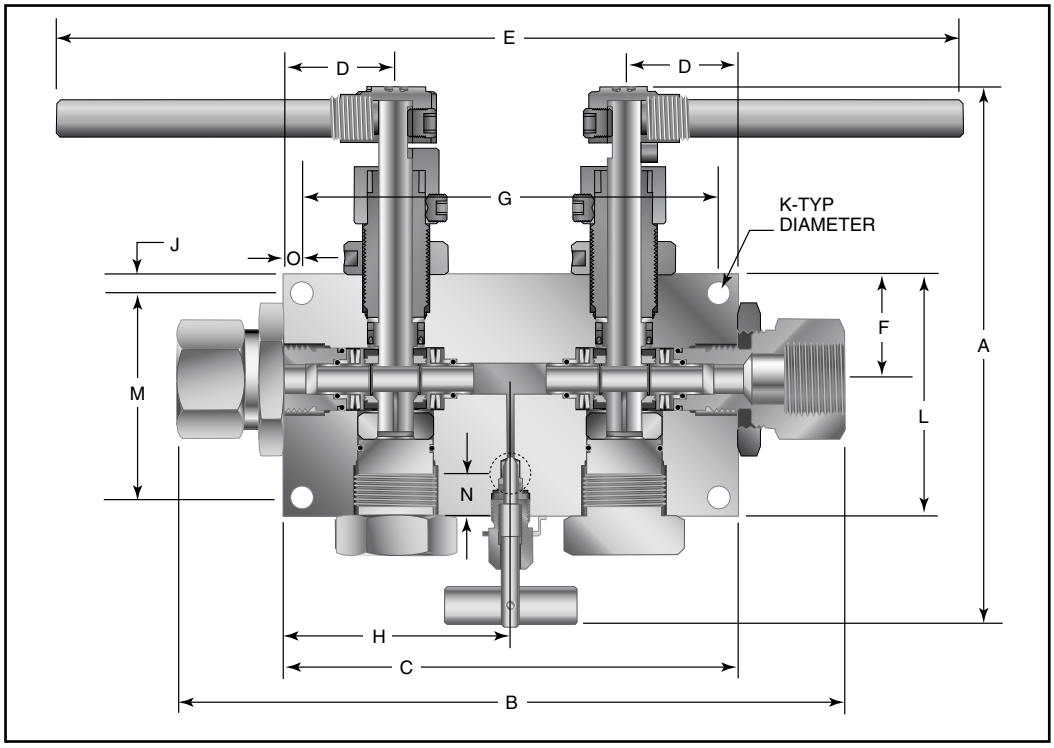

Ball Valve Panel Mounting Dimensions - inches (mm)

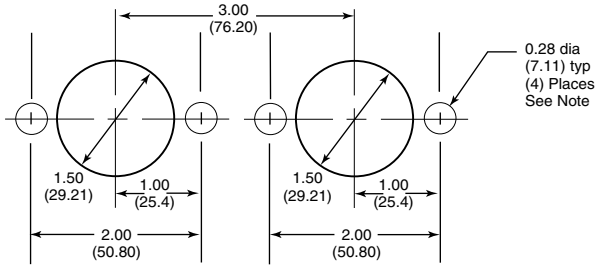

All dimensions are for reference only
and are subject to change without notice.

NOTE: Body Top Mounting 1/4-20 Thread

WARNING

FAILURE, IMPROPER SELECTION OR IMPROPER USE OF THE PRODUCTS AND/OR SYSTEMS DESCRIBED HEREIN OR RELATED ITEMS CAN CAUSE DEATH, PERSONAL INJURY AND PROPERTY DAMAGE. This document and other information from Parker Hannifin Corporation, its subsidiaries and authorized distributors provide product and/or system options for further investigation by users having technical expertise. It is important that you analyze all aspects of your application and review the information concerning the product or system in the current product catalog. Due to the variety of operating conditions and applications for these products or systems, the user, through its own analysis and testing, is solely responsible for making the final selection of the products and systems and assuring that all performance, safety and warning requirements of the application are met. The products described herein, including without limitation, product features, specifications, designs, availability and pricing, are subject to change by Parker Hannifin Corporation and its subsidiaries at any time without notice.

Offer of Sale

The items described in this document are available for sale by Parker Hannifin Corporation, its subsidiaries or its authorized distributors. Any sale contract entered by Parker will be governed by the provisions stated in Parker's standard terms and conditions of sale (copy available upon request).

02-1258SE January2013

Instrumentation Products Division
Autoclave Engineers Operation
8325 Hessinger Drive
Erie, Pennsylvania 16509-4679 USA
PH: 814-860-5700 FAX: 814-860-5811
www.autoclave.com

Parker Hannifin Manufacturing Ltd.
Instrumentation Products Division, Europe
Industrial Estate Whitemill
Wexford, Republic of Ireland
PH: 353 53 914 1566
FAX: 353 53 914 1582

Caution! Do not mix or interchange parts or tubing with those of other manufacturers. Doing so is unsafe and will void warranty.

Caution! Parker Autoclave Engineers Valves, Fittings and Tools are not designed to work with common commercial instrument tubing and will only work with tubing built to Parker Autoclave Engineers AES Specifications. Failure to do so will void warranty.

ISO-9001 Certified

Ball Valves

Subsea Series

Internal Pressures to 20,000 psi (1379 bar)
Water Depths to 12,500 ft (3810 meters)

Parker Autoclave Engineers subsea ball valves have been designed to fulfill the ever growing demand in the petroleum industry as well as the need for externally pressurized components in other markets. Utilizing the same design technology as the standard ball valve, the subsea design incorporates the necessary design alterations to provide a reliable externally pressurized valve for the subsea industry.

With the availability of fittings, tubing, and related equipment our ball valves can provide all your needs on high-pressure applications above or below the surface.

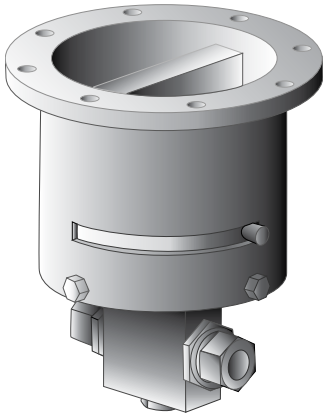

Adaptable for Remote Operated Vehicle (ROV) operation by customer

Ball Valve Features:

- One-piece, trunnion mounted style, stem design eliminates shear failure found in two-piece designs.
- Re-torqueable seat glands for longer seat life.
- PEEK seats which offer excellent resistance to chemicals, heat, and wear/abrasion.
- Full-port flow path minimizes pressure drop.
- 316 cold worked stainless steel construction.
- Buna-N o-ring standard 250°F (121°C) max.
- Low friction pressure assisted graphite filled PTFE stem seal increases cycle life.
- Wide selection of tube and pipe end fittings available.
- Available to NACE MR-01-75.
- Optional wetted materials.
- Available in a number of flow configurations and port sizes.

Applications:

- Subsea hydraulic manifolds
- Subsea control panels
- Subsea trees

Parker

Autoclave Engineers

www.autoclave.com

The Parker Autoclave Engineers ball valves can be utilized to switch or isolate flow. The standard material of construction of the valve is 316 cold worked stainless steel with PEEK seats, graphite filled PTFE stem seal, and o-ring material as required by the process fluid.

The subsea ball valve design incorporates additional o-ring seals, which prevent the ingress of seawater into the valve which would adversely affect the operation of the valve as well as contaminate the process fluid. A significant feature of the subsea design is a thrust washer positioned under the stem preventing outside sea water from moving the stem from it's aligned position.

Subsea ball valves are designed to facilitate operation by a Remote Operated vehicle (ROV). ROV operator assemblies are used for valve mounting and to provide positive stopping for precise 90° operation.

Various tube and pipe connections are available throughout a variety of valve configurations with standard port sizes from 3/16" to 1". Contact Parker Autoclave Engineers technical sales support or your local distributor for more information on optional materials of construction, seal materials and ROV operator designs to fit your application requirements.

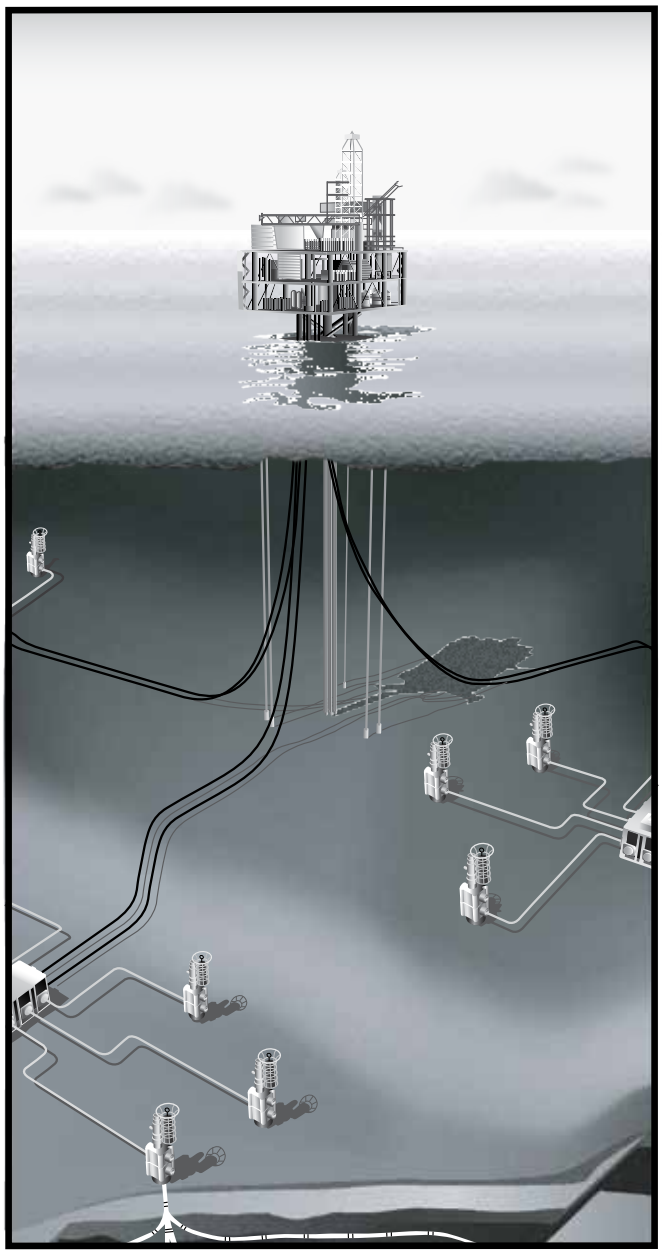

Ball Valves - 2-Way Subsea Series (1/4" Orifice)

Pressures to 20,000 psi (1379 bar) .250" (6.35mm) Orifice

Connection	MAWP @ Room Temperature	Minimum Orifice inches(mm)
W125	15,000 psi (1034 bar)	.094 (2.39)
SW250	15,000 psi (1034 bar)	.128 (3.25)
SW375	15,000 psi (1034 bar)	.250 (6.35)
SW500	10,000 psi (690 bar)	.250 (6.35)
SF250CX20	20,000 psi (1379 bar)	.109 (2.77)
SF375CX20	20,000 psi (1379 bar)	.203 (5.16)
SF562CX20	20,000 psi (1379 bar)	.250 (6.35)
F250C	20,000 psi (1379 bar)	.094 (2.39)
F375C	20,000 psi (1379 bar)	.125 (3.17)
F562C	20,000 psi (1379 bar)	.188 (4.77)
1/8" NPT	15,000 psi (1034 bar)	.250 (6.35)
1/4" NPT	15,000 psi (1034 bar)	.250 (6.35)
3/8" NPT	15,000 psi (1034 bar)	.250 (6.35)
1/2" NPT	15,000 psi (1034 bar)	.250 (6.35)
	Valve C_V=1.51	

MAWP: Maximum Allowable Working Pressure
C_V listed is for maximum orifice size of .250 inches only.
Consult factory for C_V of valves with reduced orifice sizes.

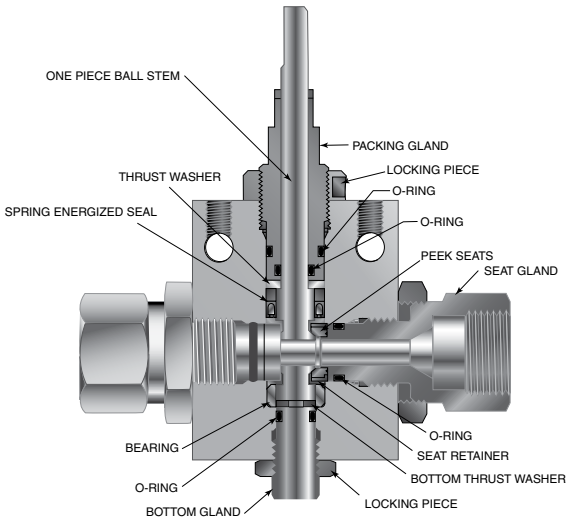

PRESSURE TEMPERATURE RATINGS

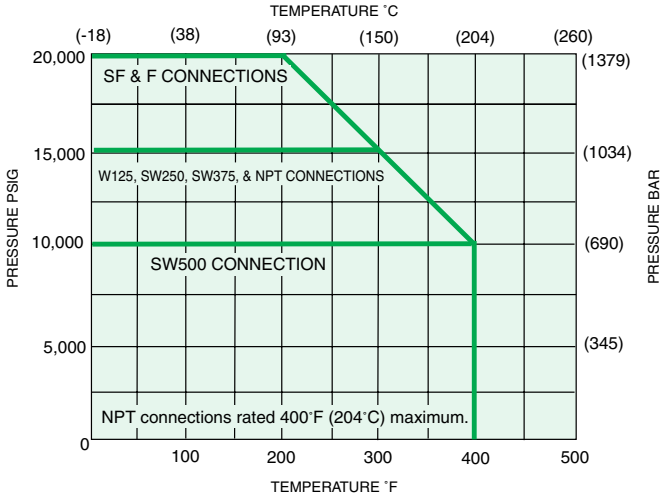

Pressure ratings are determined by the end connections chosen, see chart.

Maximum temperature rating is determined by the o-ring material (see descriptions below).

Maximum pressure rating is determined by the end connection (see table above).

NOTE: Ball valves are not recommended for critical gas applications such as Hydrogen, Helium or other small molecular gases.

Ordering Procedure

For complete information on available end connections, see next page. 2-way ball valves are furnished complete with tube or pipe connections. Standard valve has Buna-N o-rings [250°F (121°C)] max.

Typical catalog number: **S2B 4 S 20 M9**

S2B	4	S	20	M9	—	XXX
Valve Series	**Ball Orifice Diameter**	**Material**	**Pressure (X 1000 psi)**	**End Connection**		**Options**
Subsea-2-way	**4**-1/4" (6.35mm)	**S** - 316SS (For material options contact factory)		**M9** - SF562CX20 (See Chart on next page)		**V** - Viton: 400°F (204°C) max **EPDM** - Ethylene Propylene: 250°F (121°C) max

End Connection Options

Catalog Number	End Connection Number	Connection	MAWP @ Room Temperature	Seat Gland Hex Inches(mm)
S2B4S15L2	L2	W125	15,000 psi (1034 bar)	1 (25.40)
S2B4S15L4	L4	SW250	15,000 psi (1034 bar)	1 (25.40)
S2B4S15L6	L6	SW375	15,000 psi (1034 bar)	1 (25.40)
S2B4S10L8	L8	SW500	10,000 psi (690 bar)	1 (25.40)
S2B4S20M4	M4	SF250CX20	20,000 psi (1379 bar)	1 (25.40)
S2B4S20M6	M6	SF375CX20	20,000 psi (1379 bar)	1 (25.40)
S2B4S20M9	M9	SF562CX20	20,000 psi (1379 bar)	1 (25.40)
S2B4S20H4	H4	F250C	20,000 psi (1379 bar)	1 (25.40)
S2B4S20H6	H6	F375C	20,000 psi (1379 bar)	1 (25.40)
S2B4S20H9	H9	F562C	20,000 psi (1379 bar)	1.38 (35.05)
S2B4S15P2	P2	1/8” NPT	15,000 psi (1034 bar)	1 (25.40)
S2B4S15P4	P4	1/4” NPT	15,000 psi (1034 bar)	1 (25.40)
S2B4S15P6	P6	3/8” NPT	15,000 psi (1034 bar)	1 (25.40)
S2B4S15P8	P8	1/2” NPT	15,000 psi (1034 bar)	1.38 (35.05)

MAWP: Maximum Allowable Working Pressure
See ball valve option/details section for end connection details, material, and high temperature options.

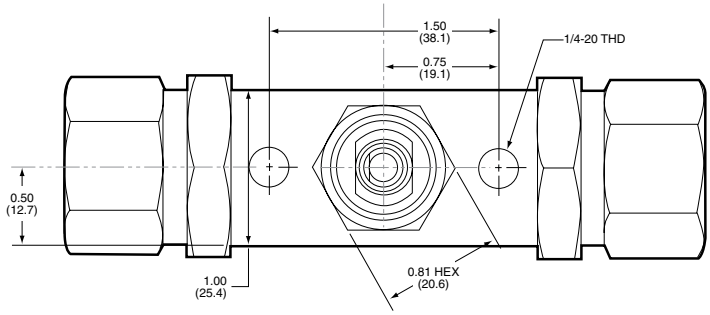

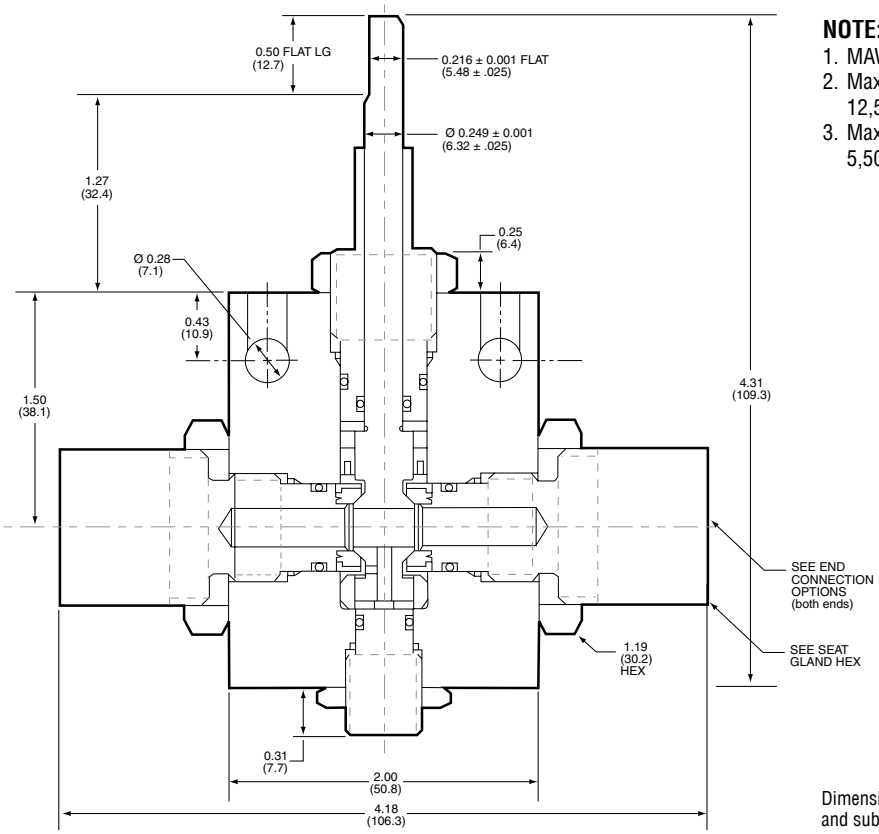

NOTE:
1. MAWP (See Table)
2. Maximum Sea Depth 12,500 FT (3811 meters)
3. Maximum External Pressure 5,500 psi (379 bar)

Dimensions for reference only and subject to change.

Ball Valves - 2-Way Subsea Series (3/8" Orifice)

Pressures to 20,000 psi (1379 bar) .375" (9.52mm) Orifice

Connection	MAWP @ Room Temperature	Minimum Orifice inches(mm)
SW500	10,000 psi (690 bar)	.375 (9.52)
SF375CX20	20,000 psi (1379 bar)	.203 (5.16)
SF562CX20	20,000 psi (1379 bar)	.312 (7.92)
SF750CX20	20,000 psi (1379 bar)	.375 (9.52)
1/4" NPT	15,000 psi (1034 bar)	.375 (9.52)
3/8" NPT	15,000 psi (1034 bar)	.375 (9.52)
1/2" NPT	15,000 psi (1034 bar)	.375 (9.52)
	Valve C_V=3.51	

MAWP: Maximum Allowable Working Pressure
C_V listed is for maximum orifice size of .375 inches only.
Consult factory for C_V of valves with reduced orifice sizes.

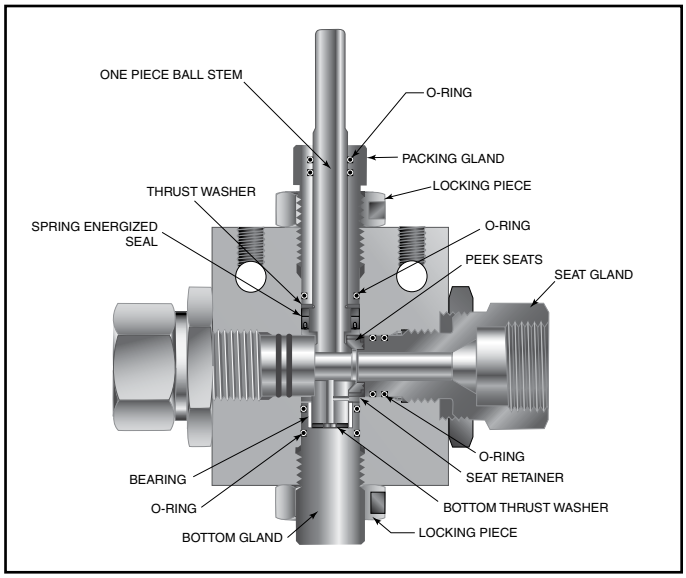

PRESSURE TEMPERATURE RATINGS

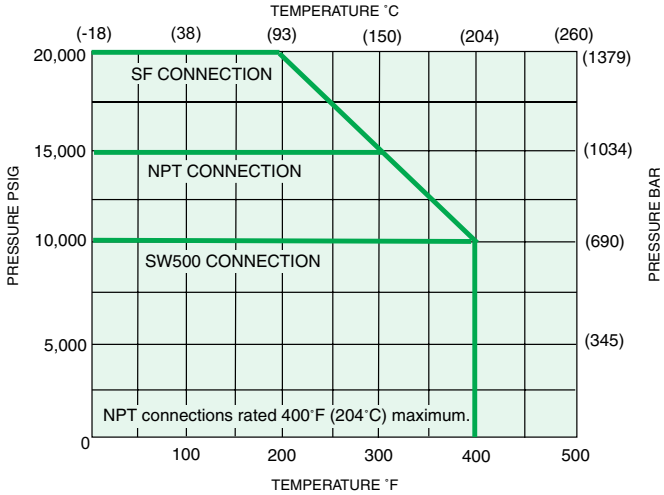

Pressure ratings are determined by the end connections chosen, see chart.

Maximum temperature rating is determined by the o-ring material (see descriptions below).

Maximum pressure rating is determined by the end connection (see table above).

NOTE: Ball valves are not recommended for critical gas applications such as Hydrogen, Helium or other small molecular gases.

Ordering Procedure

For complete information on available end connections, see next page. 2-way ball valves are furnished complete with tube or pipe connections. Standard valve has Buna-N o-rings [250°F (121°C)] max.

Typical catalog number: **S2B 6 S 20 M9**

S2B	6	S	20	M9	—	XXX
Valve Series	**Ball Orifice Diameter**	**Material**	**Pressure (X 1000 psi)**	**End Connection**		**Options**
Subsea-2-way	**6**-3/8" (9.52 mm)	**S** - 316SS (For material options contact factory)		**M9** - SF562CX20 (See Chart on next page)		**V** - Viton: 400°F (204°C) max **EPDM** - Ethylene Propylene: 250°F (121°C) max

End Connection Options

Catalog Number	End Connection Number	Connection	MAWP @ Room Temperature	Seat Gland Hex Inches(mm)
S2B6S10L8	L8	SW500	10,000 psi (690 bar)	1.38 (35.05)
S2B6S20M6	M6	SF375CX20	20,000 psi (1379 bar)	1.38 (35.05)
S2B6S20M9	M9	SF562CX20	20,000 psi (1379 bar)	1.38 (35.05)
S2B6S20M12	M12	SF750CX20	20,000 psi (1379 bar)	1.38 (35.05)
S2B6S15P4	P4	1/4” NPT	15,000 psi (1034 bar)	1.38 (35.05)
S2B6S15P6	P6	3/8” NPT	15,000 psi (1034 bar)	1.38 (35.05)
S2B6S15P8	P8	1/2” NPT	15,000 psi (1034 bar)	1.38 (35.05)

MAWP: Maximum Allowable Working Pressure

See ball valve option/details section for end connection details, material, and high temperature options.

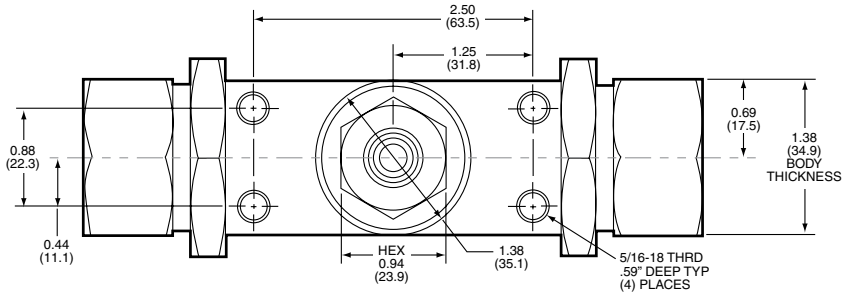

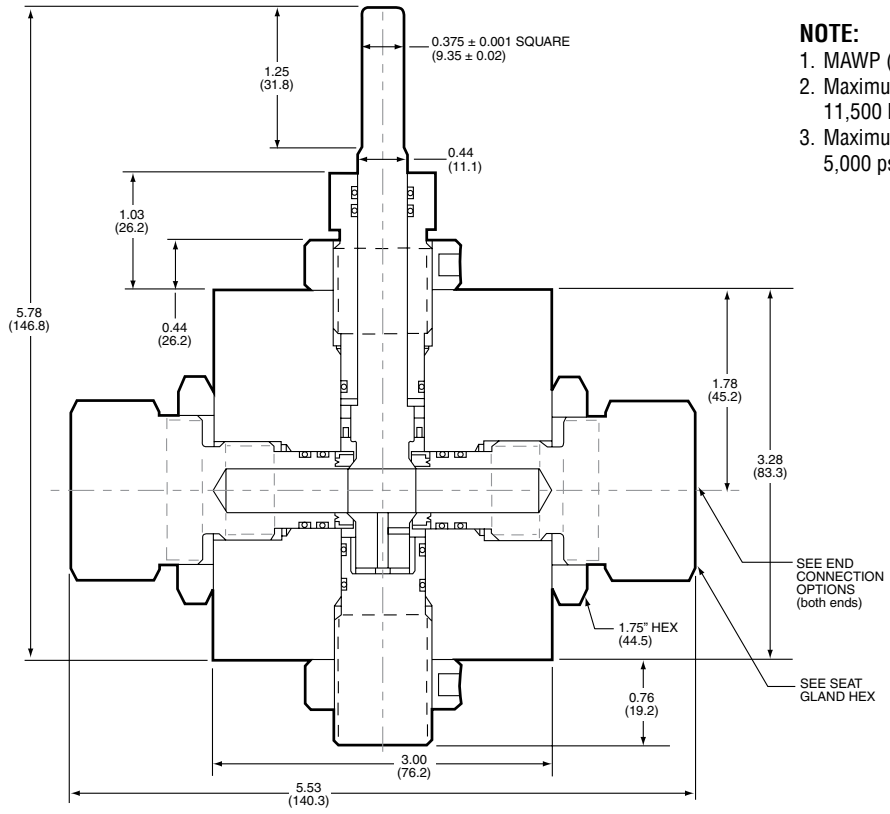

NOTE:

1. MAWP (See Table)
2. Maximum Sea Depth 11,500 FT (3505 meters)
3. Maximum External Pressure 5,000 psi (345 bar)

Dimensions for reference only and subject to change.

Ball Valves - 2-Way Subsea Series (1/2" Orifice)

Pressures to 15,000 psi (1034 bar) .500" (12.7mm) Orifice

Connection	MAWP @ Room Temperature	Minimum Orifice Inches (mm)
SF750CX20	15,000 psi (1034 bar)	.500 (12.70)
SF1000CX20	15,000 psi (1034 bar)	.500 (12.70)
3/4" NPT	10,000 psi (690 bar)	.500 (12.70)
1" NPT	10,000 psi (690 bar)	.500 (12.70)
	Valve C_V=10.20	

MAWP: Maximum Allowable Working Pressure

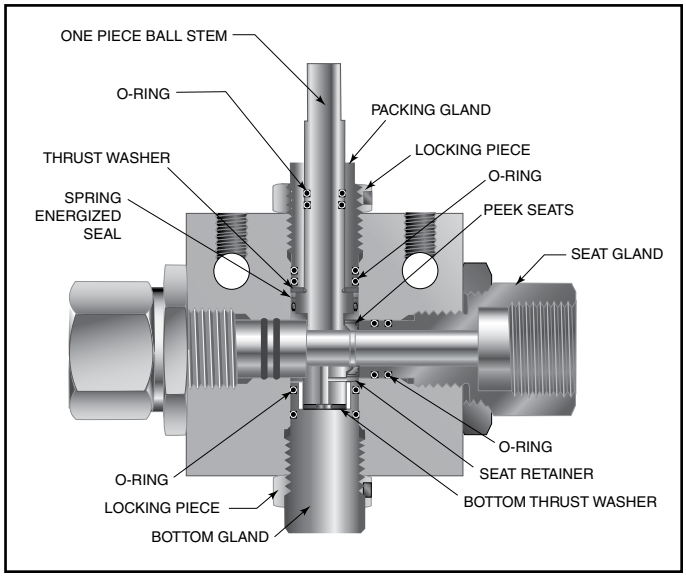

PRESSURE TEMPERATURE RATINGS

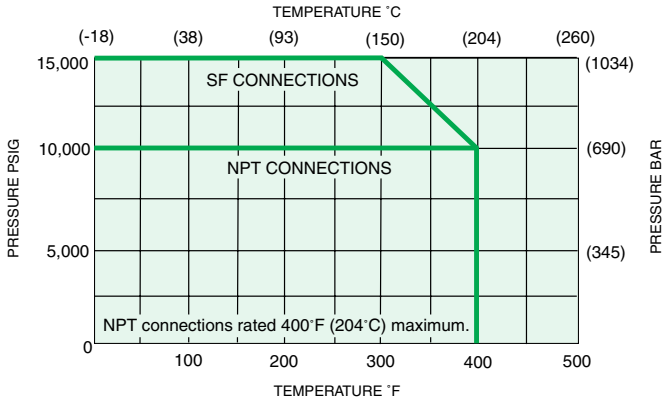

Pressure ratings are determined by the end connections chosen, see chart.

Maximum temperature rating is determined by the o-ring material (see descriptions below).

Maximum pressure rating is determined by the end connection (see table above).

NOTE: Ball valves are not recommended for critical gas applications such as Hydrogen, Helium or other small molecular gases.

Ordering Procedure

For complete information on available end connections, see next page. 2-way ball valves are furnished complete with tube or pipe connections. Standard valve has Buna-N o-rings [250°F (121°C)] max.

Typical catalog number: **S2B 8 S 15 M12**

S2B	8	S	15	M12	—	XXX
Valve Series	**Ball Orifice Diameter**	**Material**	**Pressure (X 1000 psi)**	**End Connection**		**Options**
Subsea-2-way	**8**-1/2" (12.7 mm)	**S** - 316SS (For material options contact factory)		**M12** - SF750CX20 (See Chart on next page)		**V** - Viton: 400°F (204°C) max **EPDM** - Ethylene Propylene: 250°F (121°C) max

End Connection Options

Catalog Number	End Connection Number	Connection	MAWP @ Room Temperature	Seat Gland Hex Inches(mm)
S2B8S15M12	M12	SF750CX20	15,000 psi (1034 bar)	1.75 (44.5)
S2B8S15M16	M16	SF1000CX20	15,000 psi (1034 bar)	1.75 (44.5)
S2B8S10P12	P12	3/4” NPT	10,000 psi (690 bar)	1.75 (44.5)
S2B8S10P16	P16	1” NPT	10,000 psi (690 bar)	1.75 (44.5)

MAWP: Maximum Allowable Working Pressure

See ball valve option/details section for end connection details, material, and high temperature options.

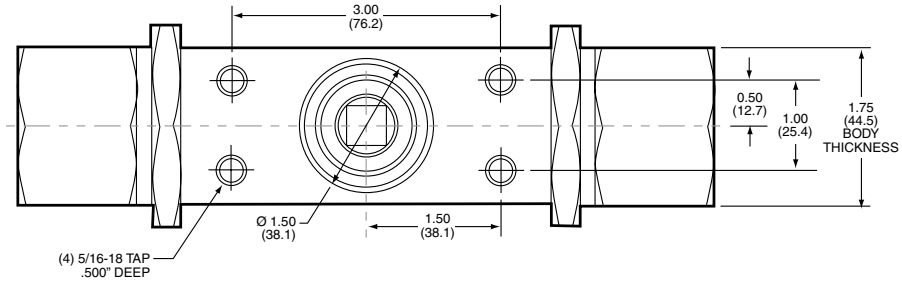

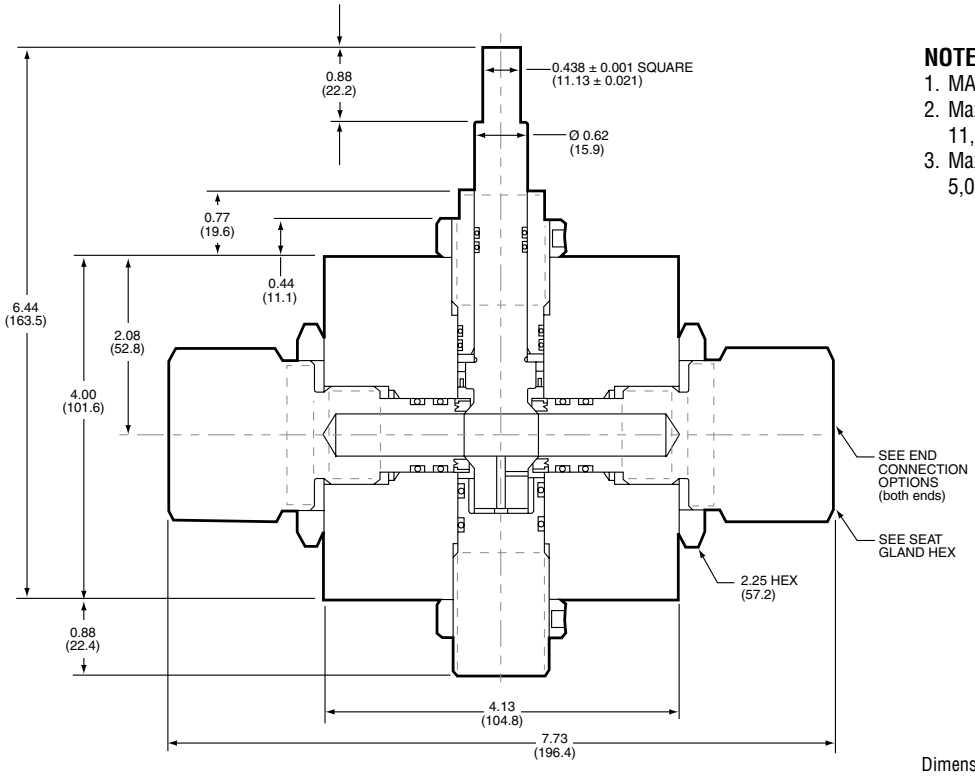

NOTE:
1. MAWP (See Table)
2. Maximum Sea Depth 11,500 FT (3505 meters)
3. Maximum External Pressure 5,000 psi (345 bar)

Dimensions for reference only and subject to change.

Ball Valves - 2-Way Subsea Series (3/4" Orifice)

Pressures to 15,000 psi (1034 bar) .750" (19mm) Orifice

Connection	MAWP @ Room Temperature	Minimum Orifice Inches (mm)
SF750CX10	15,000 psi (1034 bar)	.516 (13.10)
SF1000CX10	15,000 psi (1034 bar)	.688 (17.47)
1/2" NPT	15,000 psi (1034 bar)	.688 (17.47)
3/4" NPT	10,000 psi (690 bar)	.75 (19.05)
1" NPT	10,000 psi (690 bar)	.75 (19.05)
	Valve C_V=21	

MAWP: Maximum Allowable Working Pressure
C_V listed is for maximum orifice size of .750 inch only.
Consult factory for C_V of valves with reduced orifice sizes.

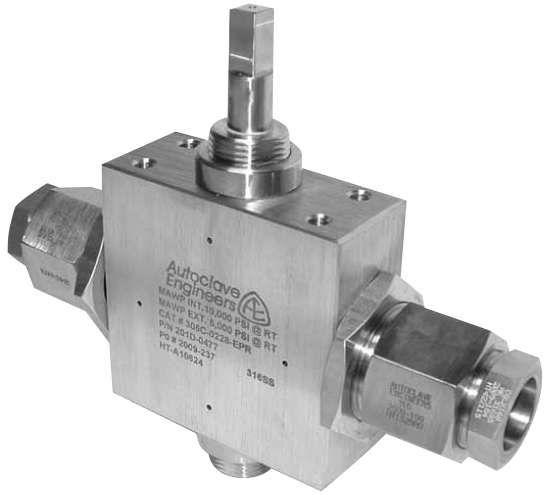

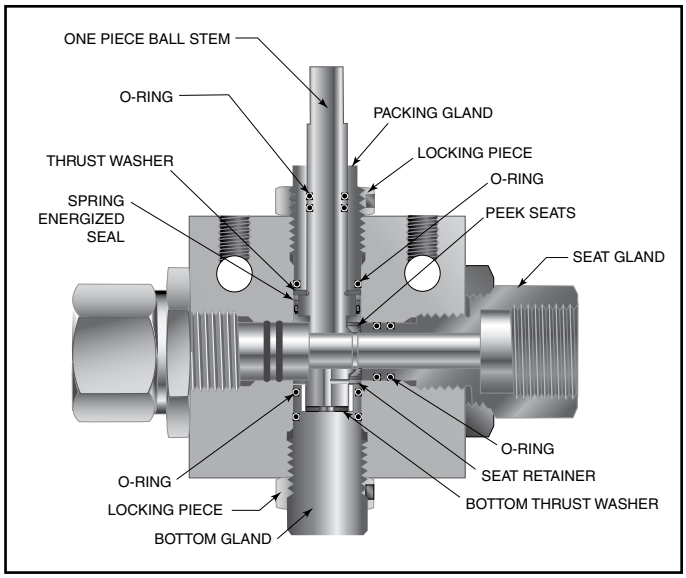

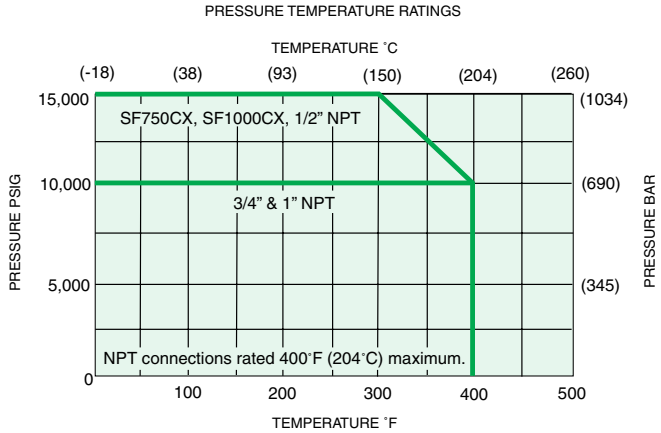

Pressure ratings are determined by the end connections chosen, see chart.

Maximum temperature rating is determined by the o-ring material (see descriptions below).

Maximum pressure rating is determined by the end connection (see table above).

NOTE: Ball valves are not recommended for critical gas applications such as Hydrogen, Helium or other small molecular gases.

Ordering Procedure

For complete information on available end connections, see next page. 2-way ball valves are furnished complete with tube or pipe connections. Standard valve has Buna-N o-rings [250°F (121°C)] max.

Typical catalog number: **S2B 12 S 15 M12**

S2B	12	S	15	M12	—	XXX
Valve Series	**Ball Orifice Diameter**	**Material**	**Pressure (X 1000 psi)**	**End Connection**		**Options**
Subsea-2-way	**12**-3/4" (19.05 mm)	**S** - 316SS (For material options contact factory)		**M12** - SF750CX10 (See Chart on next page)		**V** - Viton: 400°F (204°C) max **EPDM** - Ethylene Propylene: 250°F (121°C) max

End Connection Options

Catalog Number	End Connection Number	Connection	MAWP @ Room Temperature	Seat Gland Hex Inches(mm)
S2B12S15M12	M12	SF750CX20	15,000 psi (1034 bar)	1.88 (47.8)
S2B12S15M16	M16	SF1000CX20	15,000 psi (1034 bar)	1.88 (47.8)
S2B12S15P8	P8	1/2” NPT	15,000 psi (1034 bar)	1.88 (47.8)
S2B12S10P12	P12	3/4” NPT	10,000 psi (690 bar)	1.88 (47.8)
S2B12S10P16	P16	1” NPT	10,000 psi (690 bar)	1.88 (47.8)

MAWP: Maximum Allowable Working Pressure

See ball valve option/details section for end connection details, material, and high temperature options.

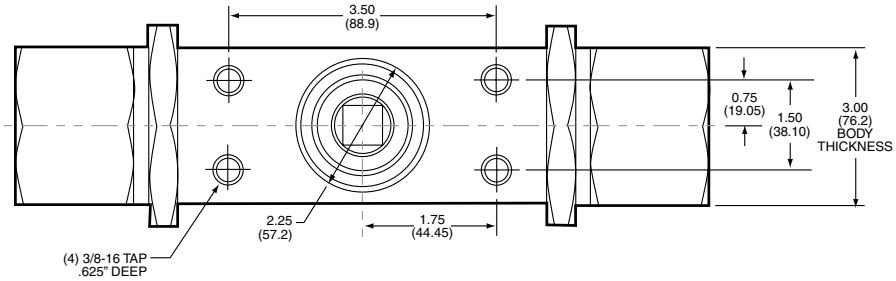

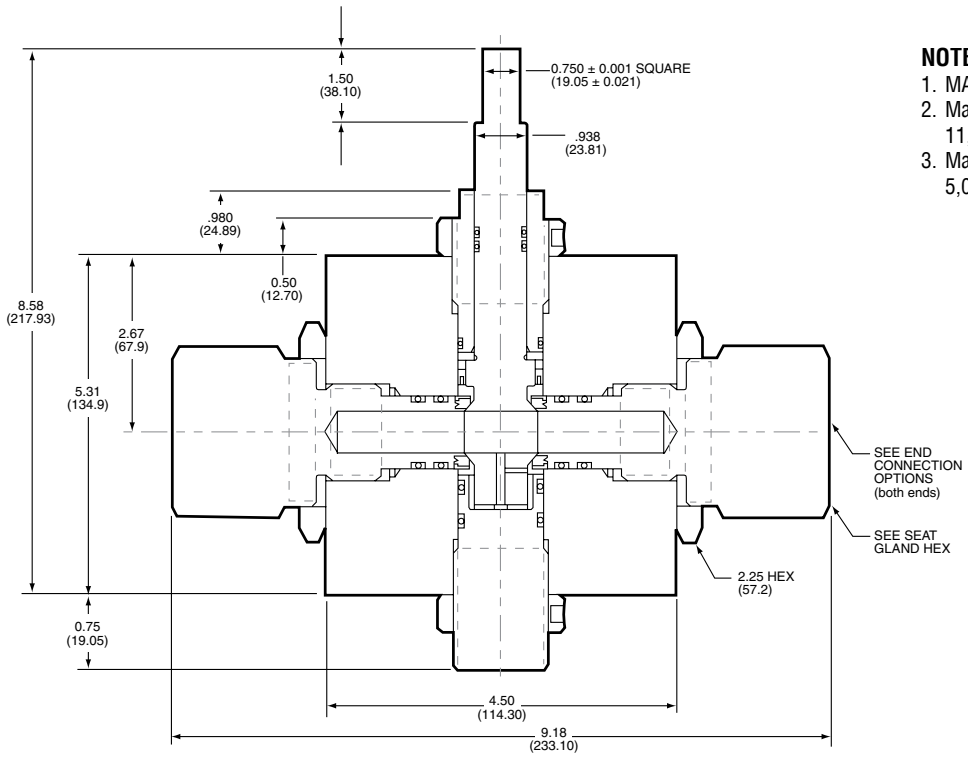

NOTE:
1. MAWP (See Table)
2. Maximum Sea Depth 11,500 FT (3505 meters)
3. Maximum External Pressure 5,000 psi (345 bar)

Dimensions for reference only and subject to change.

Ball Valves - 2-Way Subsea Series (1" Orifice)

Pressures to 10,000 psi (690 bar) 1.00" (25.4mm) Orifice

Connection	MAWP @ Room Temperature	Minimum Orifice Inches (mm)	Valve C_V
SF1500CX	10,000 psi (690 bar)	.938 (23.83)	30
3/4" NPT	10,000 psi (690 bar)	1.00 (25.40)	34
1" NPT	10,000 psi (690 bar)	1.00 (25.40)	34

MAWP: Maximum Allowable Working Pressure

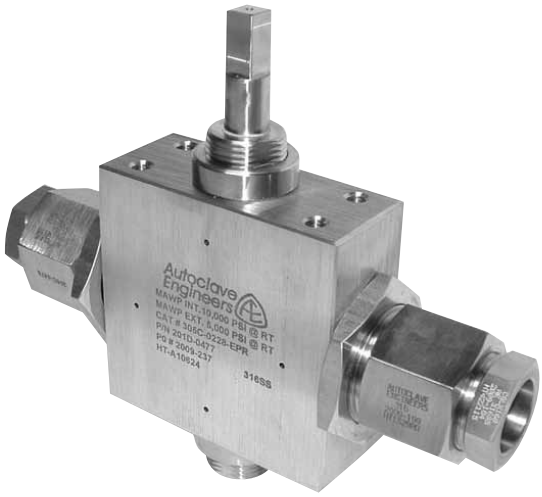

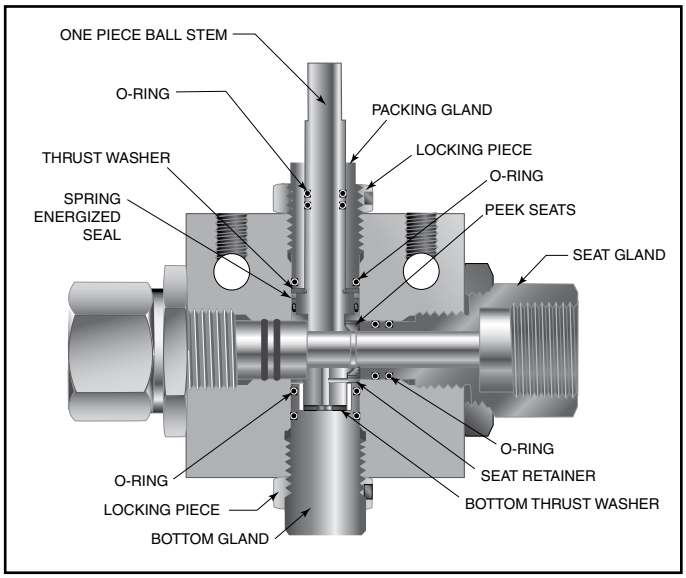

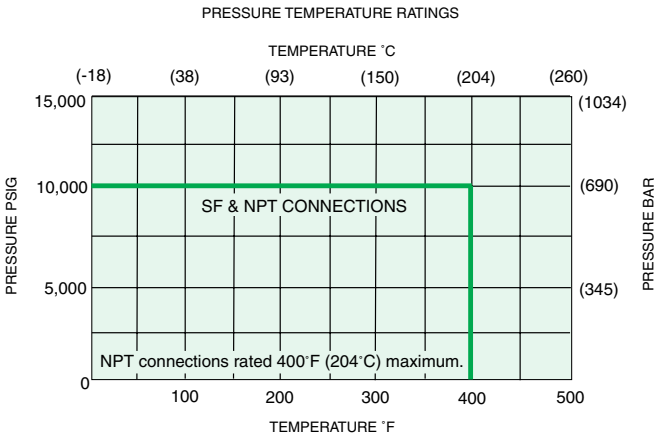

Pressure ratings are determined by the end connections chosen, see chart.

Maximum temperature rating is determined by the o-ring material (see descriptions below).

Maximum pressure rating is determined by the end connection (see table above).

NOTE: Ball valves are not recommended for critical gas applications such as Hydrogen, Helium or other small molecular gases.

Ordering Procedure

For complete information on available end connections, see next page. 2-way ball valves are furnished complete with tube or pipe connections. Standard valve has Buna-N o-rings [250°F (121°C)] max.

Typical catalog number: **S2B 16 S 10 P16**

S2B	16	S	10	P16	—	XXX
Valve Series	**Ball Orifice Diameter**	**Material**	**Pressure (X 1000 psi)**	**End Connection**		**Options**
Subsea-2-way	**16**-1" (25.4 mm)	**S** - 316SS (For material options contact factory)		**P16** - 1" NPT (See Chart on next page)		**V** - Viton: 400°F (204°C) max **EPDM** - Ethylene Propylene: 250°F (121°C) max

End Connection Options

Catalog Number	End Connection Number	Connection	MAWP @ Room Temperature	Seat Gland Hex Inches(mm)
S2B16S10M24	M24	SF1500CX	10,000 psi (690 bar)	1.88 (47.75)
S2B16S10P12	P12	3/4” NPT	10,000 psi (690 bar)	1.88 (47.75)
S2B16S10P16	P16	1” NPT	10,000 psi (690 bar)	1.88 (47.75)

MAWP: Maximum Allowable Working Pressure

See ball valve option/details section for end connection details, material, and high temperature options.

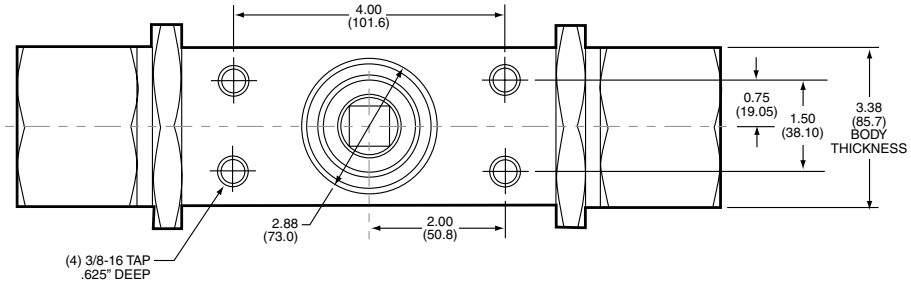

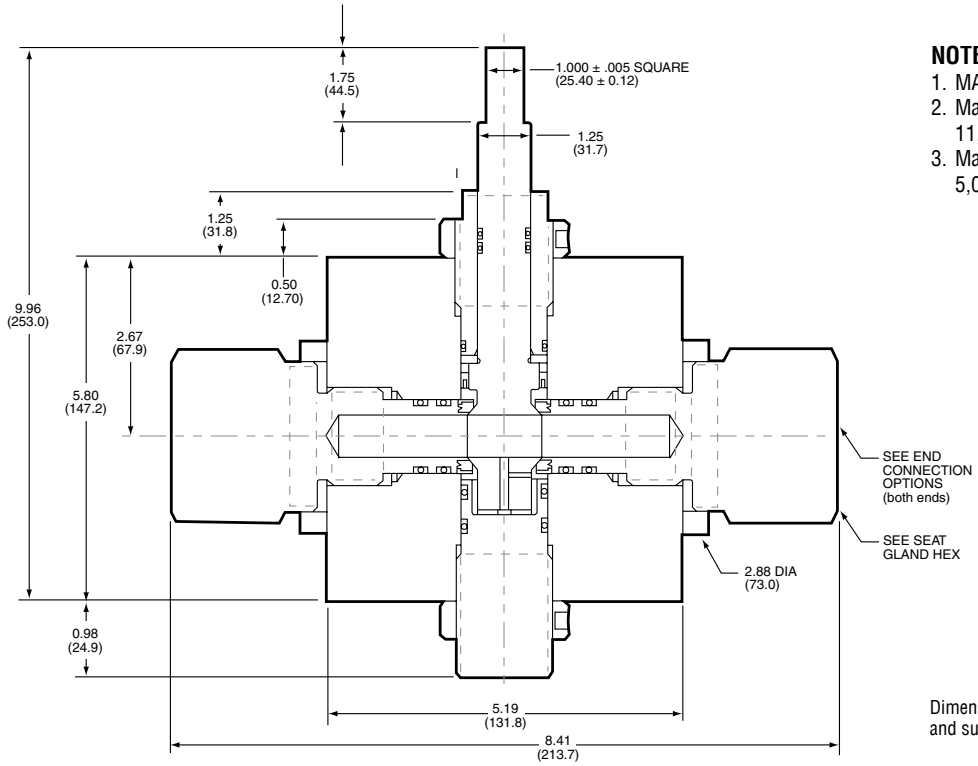

NOTE:
1. MAWP (See Table)
2. Maximum Sea Depth 11,500 FT (3505 meters)
3. Maximum External Pressure 5,000 psi (345 bar)

Dimensions for reference only and subject to change.

Dimensions for P12 and P16 connections only. Contact facotry for M16 dimensions.

Ball Valves - 3-Way Subsea Series (3/16" Orifice)

Pressures to 20,000 psi (1379 bar) .187" (4.77mm) Orifice

Connection	MAWP @ Room Temperature	Minimum Orifice inches(mm)
SF250CX20	20,000 psi (1379 bar)	.109 (2.77)
SF375CX20	20,000 psi (1379 bar)	.188 (4.77)
SF562CX20	20,000 psi (1379 bar)	.188 (4.77)
F250C	20,000 psi (1379 bar)	.094 (2.39)
F375C	20,000 psi (1379 bar)	.125 (3.17)
1/4" NPT	15,000 psi (1034 bar)	.188 (4.77)
3/8" NPT	15,000 psi (1034 bar)	.188 (4.77)
	Valve C_V=.50	

MAWP: Maximum Allowable Working Pressure
C_V listed is for maximum orifice size of .188 inches only.
Consult factory for C_V of valves with reduced orifice sizes.

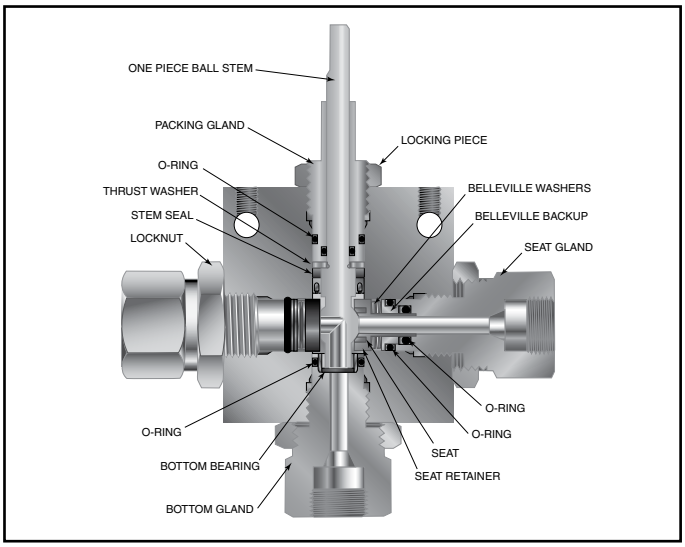

PRESSURE TEMPERATURE RATINGS

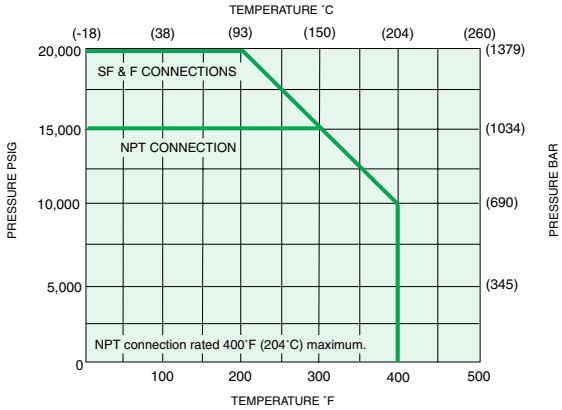

*pressure ratings are determined by the end connections chosen, see chart.
NOTE: Maximum side connection inlet pressure 15,000 psi (1034 bar).

Maximum temperature rating is determined by the o-ring material (see descriptions below).

Maximum pressure rating is determined by the end connection (see table above).

Note: Side inlet pressure not recommended. Bottom inlet pressure only.

NOTE: Ball valves are not recommended for critical gas applications such as Hydrogen, Helium or other small molecular gases.

Ordering Procedure

For complete information on available end connections, see next page. 3-way ball valves are furnished complete with tube or pipe connections. Standard valve has Buna-N o-rings [250°F (121°C)] max.

Typical catalog number: **S3BD 3 S 20 M9**

S3BD	3	S	20	M9	—	XXX
Valve Series	**Ball Orifice Diameter**	**Material**	**Pressure (X 1000 psi)**	**End Connection**		**Options**
S3B Subsea-3-way **S3BD Subsea**-3-way diverter	**3**-3/16" (4.77 mm)	**S** -316SS (For material options contact factory)		**M9** - SF562CX20 (See Chart on next page)		**V** - Viton: 400°F (204°C) max **EPDM** - Ethylene Propylene: 250°F (121°C) max

End Connection Options

Catalog Number	End Connection Number	Connection	MAWP @ Room Temperature	Seat Gland Hex Inches(mm)
S3B3S15M4 S3BD3S20M4	M4	SF250CX20	15,000 psi (1034 bar) 20,000 psi (1379 bar)	1 (25.40)
S3B3S15M6 S3BD3S20M6	M6	SF375CX20	15,000 psi (1034 bar) 20,000 psi (1379 bar)	1 (25.40)
S3B3S15M9 S3BD3S20M9	M9	SF562CX20	15,000 psi (1034 bar) 20,000 psi (1379 bar)	1 (25.40)
S3B3S15H4 S3BD3S20H4	H4	F250C	15,000 psi (1034 bar) 20,000 psi (1379 bar)	1 (25.40)
S3B3S15H6 S3BD3S20H6	H6	F375C	15,000 psi (1034 bar) 20,000 psi (1379 bar)	1 (25.40)
S3B3S15P4 S3BD3S15P4	P4	1/4” NPT	15,000 psi (1034 bar)	1 (25.40)
S3B3S15P6 S3BD3S15P6	P6	3/8” NPT	15,000 psi (1034 bar)	1 (25.40)

See ball valve option/detail section for end connection details, material, and high temperature options.

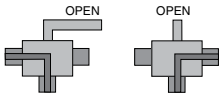

*3-Way Diverter Valve
90° Turn

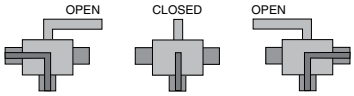

3-Way Ball Valve
180° Turn

*The Diverter Valve design permits inlet flow through the bottom port. Outlet flow may be diverted to either valve side port.

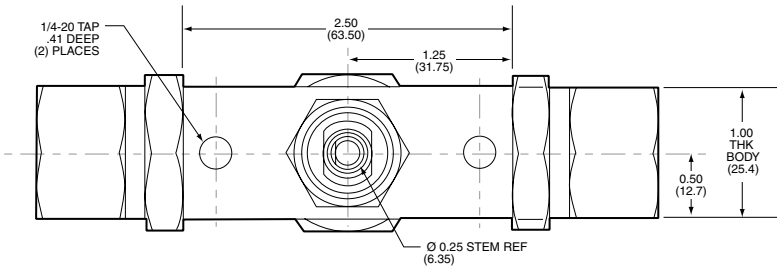

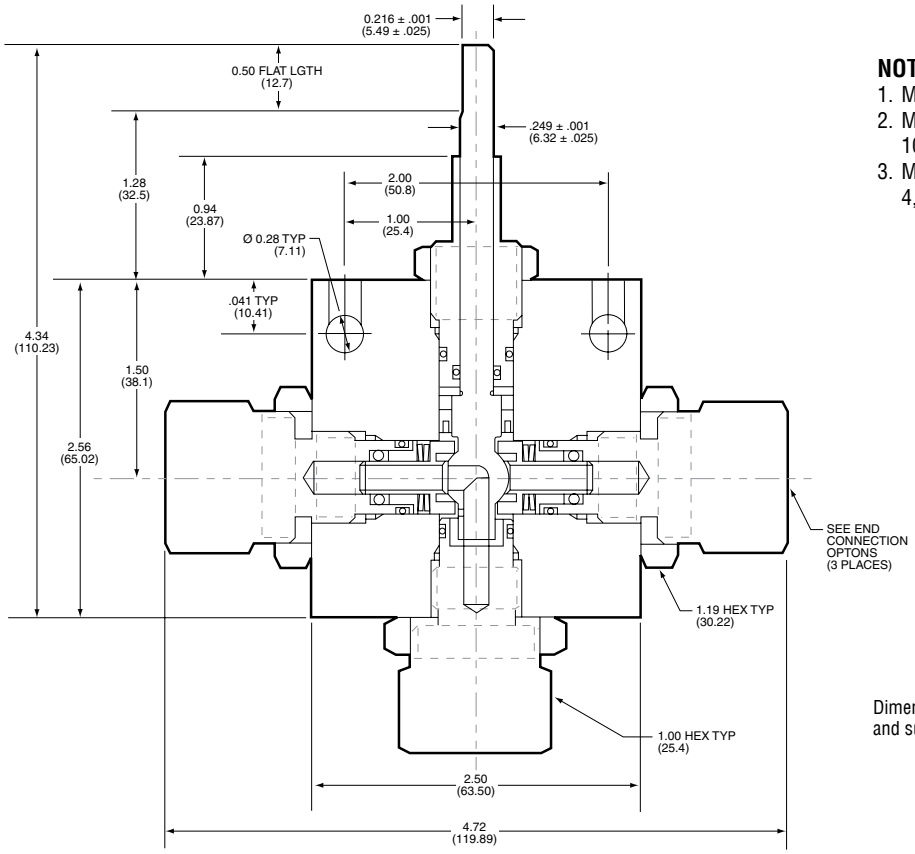

NOTE:
1. MAWP (See Table)
2. Maximum Sea Depth 10,300 FT (3140 meters)
3. Maximum External Pressure 4,500 psi (310 bar)

Dimensions for reference only and subject to change.

Ball Valves - 3-Way Subsea Series (3/8" Orifice)

Pressures to 10,000 psi (689 bar) .328" (8.33mm) Orifice

Connection	MAWP @ Room Temperature	Minimum Orifice inches(mm)
SW500	10,000 psi (690 bar)	.328 (8.33)
SF375CX20	10,000 psi (690 bar)	.203 (5.16)
SF562CX20	10,000 psi (690 bar)	.312 (7.92)
SF750CX20	10,000 psi (690 bar)	.328 (8.33)
1/4" NPT	10,000 psi (690 bar)	.328 (8.33)
3/8" NPT	10,000 psi (690 bar)	.328 (8.33)
1/2" NPT	10,000 psi (690 bar)	.328 (8.33)
	Valve C_V=2.1	

MAWP: Maximum Allowable Working Pressure
C_V listed is for maximum orifice size of .328 inches only.
Consult factory for C_V of valves with reduced orifice sizes.

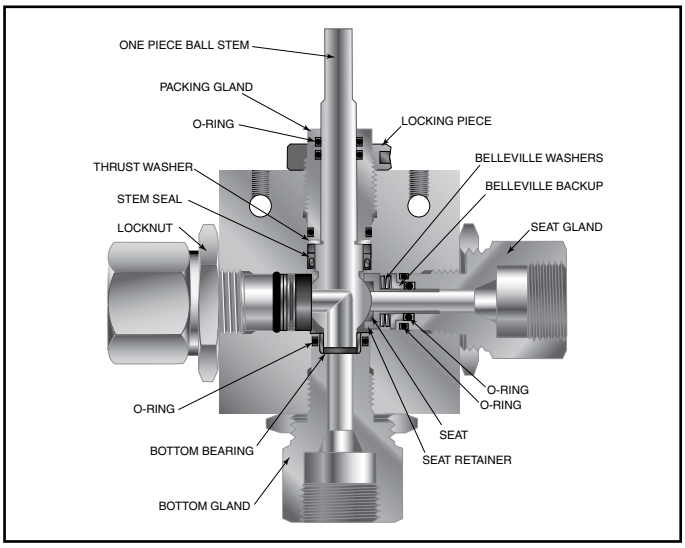

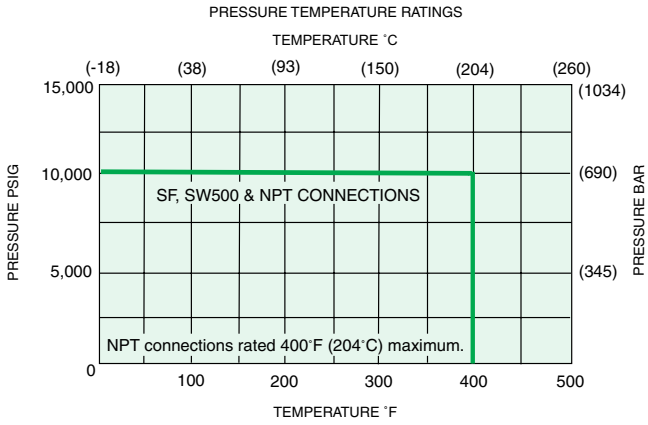

Maximum temperature rating is determined by the o-ring material (see descriptions below).

Maximum pressure rating is determined by the end connection (see table above).

Note: Side inlet pressure not recommended. Bottom inlet pressure only.

NOTE: Ball valves are not recommended for critical gas applications such as Hydrogen, Helium or other small molecular gases.

Ordering Procedure

For complete information on available end connections, see next page. 3-way ball valves are furnished complete with tube or pipe connections. Standard valve has Buna-N o-rings [250°F (121°C)] max.

Typical catalog number: **S3B 6 S 10 M9**

S3B	6	S	10	M9	—	XXX
Valve Series	**Ball Orifice Diameter**	**Material**	**Pressure (X 1000 psi)**	**End Connection**		**Options**
S3B Subsea-3-way **S3BD Subsea**-3-way diverter	**6**-3/8" (9.52 mm)	**S** -316SS (For material options contact factory)		**M9** - SF562CX20 (See Chart on next page)		**V** - Viton: 400°F (204°C) max **EPDM** - Ethylene Propylene: 250°F (121°C) max

End Connection Options

Catalog Number	End Connection Number	Connection	MAWP @ Room Temperature	Seat Gland Hex Inches(mm)
S3B6S10L8 S3BD6S10L8	L8	SW500	10,000 psi (690 bar)	1.38 (35.05)
S3B6S10M6 S3BD6S10M6	M6	SF375CX20	10,000 psi (690 bar)	1.38 (35.05)
S3B6S10M9 S3BD6S10M9	M9	SF562CX20	10,000 psi (690 bar)	1.38 (35.05)
S3B6S10M12 S3BD6S10M12	M12	SF750CX20	10,000 psi (690 bar)	1.38 (35.05)
S3B6S10P4 S3BD6S10P4	P4	1/4" NPT	10,000 psi (690 bar)	1.38 (35.05)
S3B6S10P6 S3BD6S10P6	P6	3/8" NPT	10,000 psi (690 bar)	1.38 (35.05)
S3B6S10P8 S3BD6S10P8	P8	1/2" NPT	10,000 psi (690 bar)	1.38 (35.05)

MAWP: Maximum Allowable Working Pressure

See ball valve option/details section for end connection details, material, and high temperature options.

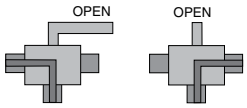

*3-Way Diverter Valve
90° Turn

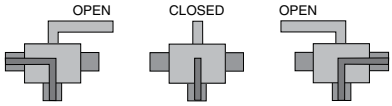

3-Way Ball Valve
180° Turn

*The Diverter Valve design permits inlet flow through the bottom port. Outlet flow may be diverted to either valve side port.

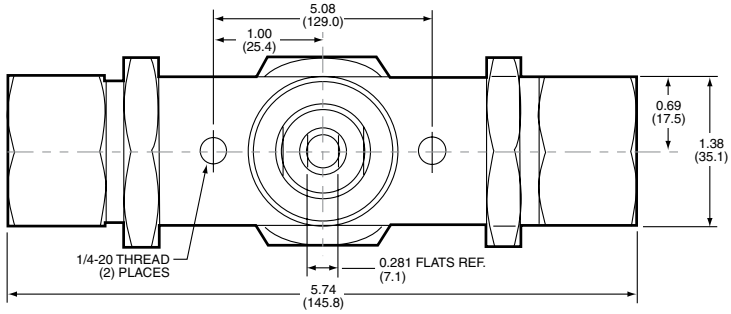

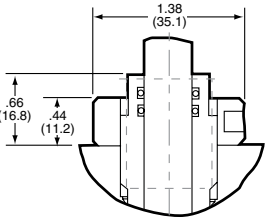

DETAIL B

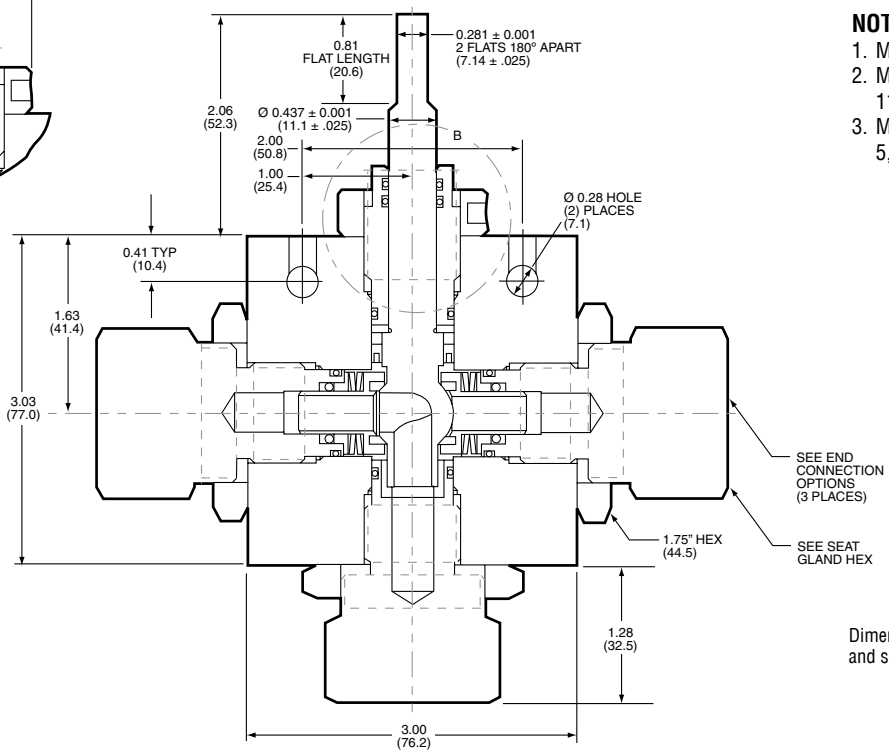

NOTE:

1. MAWP (See Table)
2. Maximum Sea Depth 11,500 FT (3505 meters)
3. Maximum External Pressure 5,000 psi (345 bar)

Dimensions for reference only and subject to change.

Ball Valves - 3-Way Subsea Series (1/2" Orifice)

Pressures to 10,000 psi (690 bar) .500" (12.7mm) Orifice

Connection	MAWP @ Room Temperature	Minimum Orifice inches(mm)
SF750CX20	10,000 psi (690 bar)	.500 (12.70)
SF1000CX20	10,000 psi (690 bar)	.500 (12.70)
3/4" NPT	10,000 psi (690 bar)	.500 (12.70)
1" NPT	10,000 psi (690 bar)	.500 (12.70)
	Valve C_V=4.4	

MAWP: Maximum Allowable Working Pressure

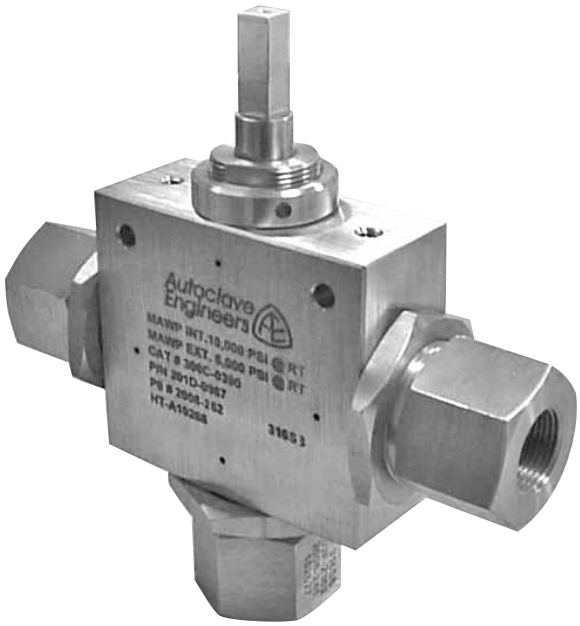

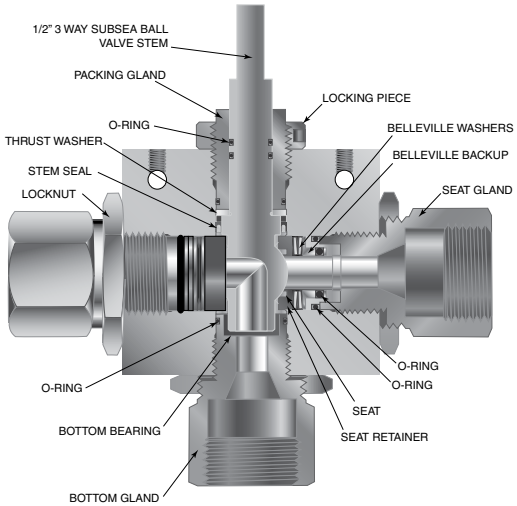

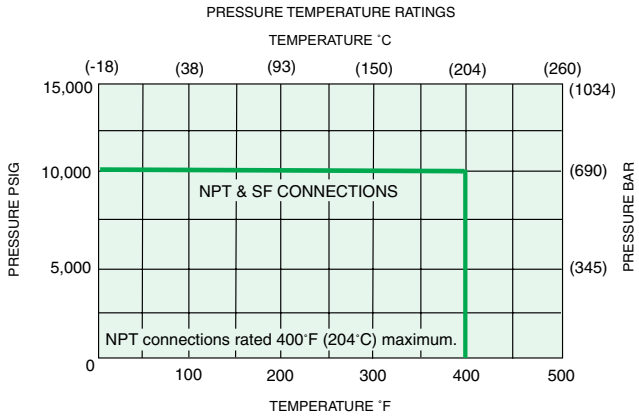

Maximum temperature rating is determined by the o-ring material (see descriptions below).

Maximum pressure rating is determined by the end connection (see table above).

Note: Side inlet pressure not recommended. Bottom inlet pressure only.

NOTE: Ball valves are not recommended for critical gas applications such as Hydrogen, Helium or other small molecular gases.

Ordering Procedure

For complete information on available end connections, see next page. 3-way ball valves are furnished complete with tube or pipe connections. Standard valve has Buna-N o-rings [250°F (121°C)] max.

Typical catalog number: **S3B 8 S 10 M12**

S3B	8	S	10	M12	—	XXX
Valve Series	**Ball Orifice Diameter**	**Material**	**Pressure (X 1000 psi)**	**End Connection**		**Options**
S3B Subsea-3-way **S3BD Subsea**-3-way diverter	**8**-1/2" (12.7 mm)	**S** -316SS (For material options contact factory)		**M12** - SF750CX20 (See Chart on next page)		**V** - Viton: 400°F (204°C) max **EPDM** - Ethylene Propylene: 250°F (121°C) max

End Connection Options

Catalog Number	End Connection Number	Connection	MAWP @ Room Temperature	Seat Gland Hex Inches(mm)
S3B8S10M12 S3BD8S10M12	M12	SF750CX20	10,000 psi (690 bar)	1.75 (44.5)
S3B8S10M16 S3BD8S10M16	M16	SF1000CX20	10,000 psi (690 bar)	1.75 (44.5)
S3B8S10P12 S3BD8S10P12	P12	3/4” NPT	10,000 psi (690 bar)	1.75 (44.5)
S3B8S10P16 S3BD8S10P16	P16	1” NPT	10,000 psi (690 bar)	1.75 (44.5)

MAWP: Maximum Allowable Working Pressure
See ball valve options for end connection details, material, and high temperature options.

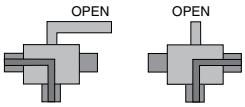

*3-Way Diverter Valve
90° Turn

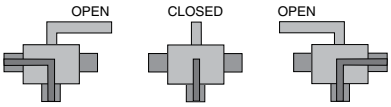

3-Way Ball Valve
180° Turn

*The Diverter Valve design permits inlet flow through the bottom port. Outlet flow may be diverted to either valve side port.

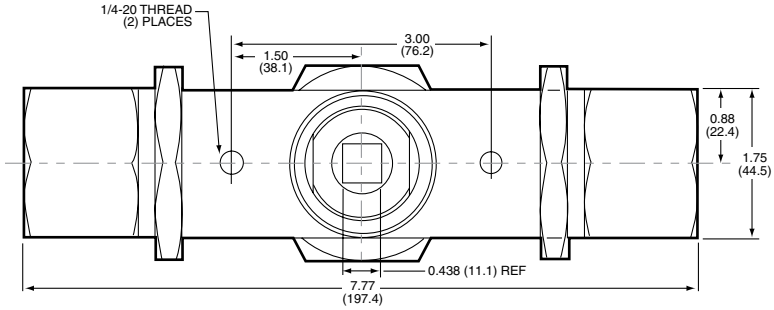

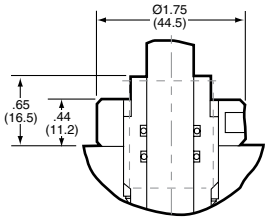

DETAIL B

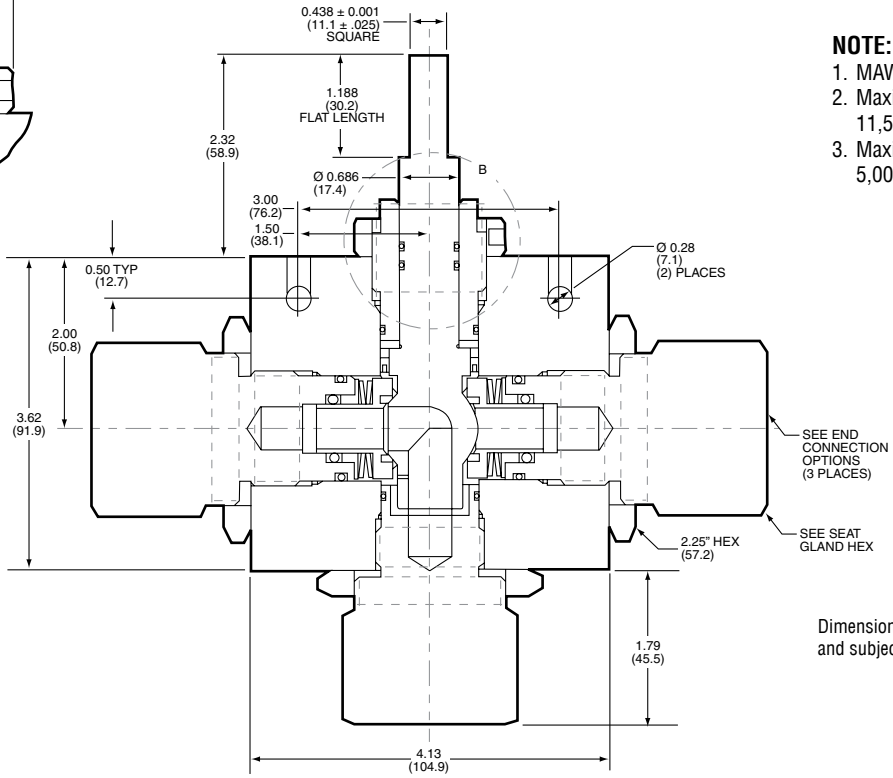

NOTE:
1. MAWP (See Table)
2. Maximum Sea Depth
   11,500 FT (3505 meters)
3. Maximum External Pressure
   5,000 psi (345 bar)

Dimensions for reference only
and subject to change.

This page is blank

WARNING

FAILURE, IMPROPER SELECTION OR IMPROPER USE OF THE PRODUCTS AND/OR SYSTEMS DESCRIBED HEREIN OR RELATED ITEMS CAN CAUSE DEATH, PERSONAL INJURY AND PROPERTY DAMAGE.

This document and other information from Parker Hannifin Corporation, its subsidiaries and authorized distributors provide product and/or system options for further investigation by users having technical expertise. It is important that you analyze all aspects of your application and review the information concerning the product or system in the current product catalog. Due to the variety of operating conditions and applications for these products or systems, the user, through its own analysis and testing, is solely responsible for making the final selection of the products and systems and assuring that all performance, safety and warning requirements of the application are met. The products described herein, including without limitation, product features, specifications, designs, availability and pricing, are subject to change by Parker Hannifin Corporation and its subsidiaries at any time without notice.

Offer of Sale

The items described in this document are available for sale by Parker Hannifin Corporation, its subsidiaries or its authorized distributors. Any sale contract entered by Parker will be governed by the provisions stated in Parker's standard terms and conditions of sale (copy available upon request).

02-0108SE January2013

Instrumentation Products Division
Autoclave Engineers Operation
8325 Hessinger Drive
Erie, Pennsylvania 16509-4679 USA
PH: 814-860-5700 FAX: 814-860-5811
www.autoclave.com

Parker Hannifin Manufacturing Ltd.
Instrumentation Products Division, Europe
Industrial Estate Whitemill
Wexford, Republic of Ireland
PH: 353 53 914 1566
FAX: 353 53 914 1582

Caution! Do not mix or interchange parts or tubing with those of other manufacturers. Doing so is unsafe and will void warranty.

Caution! Parker Autoclave Engineers Valves, Fittings and Tools are not designed to work with common commercial instrument tubing and will only work with tubing built to Parker Autoclave Engineers AES Specifications. Failure to do so will void warranty.

ISO-9001 Certified

Ball Valves

Actuators

Pneumatic Actuators
Electric Actuators

Parker Autoclave Engineers ball valves can be supplied with either pneumatic or electric operators for automated or remote operation.

Pneumatic and electric operators can be supplied with a variety of features and options. Operators are sized for each valve series to provide reliable and trouble free operation. Listed below are the operator features and available options.

Ball Valve Actuator Features/Options:

Pneumatic Operators

- Used for remote and automatic operation
- Air-to-open/spring-to-close
- Air-to-close/spring-to-open
- Air-to-open and close (double acting)
- Limit switches or limit switches with visual indicators available
- High temperature option available.
- Stainless steel housing for corrosive applications available.
- Optional solenoid valve available
- Standard anodized aluminum housing
- Optional epoxy coated housing available

Electric Operators

- Interface with control systems for automated operation and monitoring
- 120 & 220 VAC, 50/60 Hz standard
- 24VDC
- Explosion proof available
- CE mark available

Parker

Autoclave Engineers®

www.autoclave.com

Pneumatic Operated Ball Valves

Add the suffix **-AO**, **-AC** or **-AOC** to the appropriate valve catalog number for a complete valve assembly

VALVE SERIES	DIMENSION DATA - Inches (mm)										MINIMUM REQUIRED AIR PRESSURE
	"A"	"B"	"C"	"D"	"E"	"F"	"G"	"H"	"I"	"J"	
2B4-AO/AC	6.69 (169.92)	2.56 (65.02)	2.50 (63.50)	1.25 (31.75)	1.00 (25.40)	0.50 (12.70)	0.28 (7.11)	1.14 (28.95)	2.50 (63.50)	1.58 (40.13)	80 psi (5.51 bar)
2B6-AO/AC	9.84 (249.93)	3.94 (100.07)	3.00 (76.20)	1.50 (38.10)	1.50 (25.40)	0.75 (19.05)	0.34 (8.63)	1.87 (47.49)	3.00 (76.20_)	2.24 (56.89)	80 psi (5.51 bar)
2B8-AO/AC *	11.65 (259.91)	4.57 (116.07)	3.00 (76.20)	1.50 (38.10)	2.00 (50.80)	1.00 (25.40)	0.53 (13.46)	2.17 (55.11)	3.00 (76.20)	2.48 (62.99)	80 psi (5.51 bar)
3BD3-AO/AC	6.69 (169.92)	2.56 (65.02)	2.50 (63.50)	1.25 (31.75)	1.00 (25.40)	0.50 (12.70)	0.28 (7.11)	1.14 (28.95)	2.50 (63.50)	1.58 (40.13)	80 psi (5.51 bar)
3BD6-AO/AC *	9.84 (249.93)	3.94 (100.07)	3.00 (76.20)	1.50 (38.10)	1.50 (25.40)	0.75 (19.05)	0.34 (8.63)	1.87 (47.49)	3.00 (76.20_)	2.24 (56.89)	80 psi (5.51 bar)
3BD8-AO/AC	11.65 (259.91)	4.57 (116.07)	3.00 (76.20)	1.50 (38.10)	2.00 (50.80)	1.00 (25.40)	0.53 (13.46)	2.17 (55.11)	3.00 (76.20)	2.48 (62.99)	80 psi (5.51 bar)
2B4-AOC	6.69 (169.92)	2.56 (65.02)	2.50 (63.50)	1.25 (31.75)	1.00 (25.40)	0.50 (12.70)	0.28 (7.11)	1.14 (28.95)	2.50 (63.50)	1.58 (40.13)	80 psi (5.51 bar)
2B6-AOC	7.95 (201.93)	3.07 (77.97)	3.00 (76.20)	1.50 (38.10)	1.50 (38.10)	0.75 (19.05)	0.34 (8.63)	1.40 (35.56)	3.00 (76.20_)	1.77 (44.95)	80 psi (5.51 bar)
2B8-AOC	9.84 (249.91)	3.94 (100.07)	3.00 (76.20)	1.50 (38.10)	2.00 (50.80)	1.00 (25.40)	0.53 (13.46)	1.87 (47.49)	3.00 (76.20)	2.24 (56.89)	80 psi (5.51 bar)
3BD3-AOC	6.69 (169.92)	2.56 (65.02)	2.50 (63.50)	1.25 (31.75)	1.00 (25.40)	0.50 (12.70)	0.28 (7.11)	1.14 (28.95)	2.50 (63.50)	1.58 (40.13)	80 psi (5.51 bar)
3BD6-AOC	7.95 (201.93)	3.07 (77.97)	3.00 (76.20)	1.50 (38.10)	1.50 (25.40)	0.75 (19.05)	0.34 (8.63)	1.40 (35.56)	3.00 (76.20_)	1.77 (44.95)	80 psi (5.51 bar)
3BD8-AOC	9.84 (249.91)	3.94 (100.07)	3.00 (76.20)	1.50 (38.10)	2.00 (50.80)	1.00 (25.40)	0.53 (13.46)	1.87 (47.49)	3.00 (76.20)	2.24 (56.89)	80 psi (5.51 bar)

NOTE:
- Maximum allowable air pressure is 150 psi (10.34)
- 1/8" NPT female air connector (*= 1/4" NPT)
- AO: Air to open/spring to close
- AC: Air to close/spring to open
- AOC: Air to open/air to close (double acting)
- Actuators operating temperature: 0°F to 175°F (-17°C to 79°C)
- High temperature actuator option available, consult factory
- Stainless steel housing actuator models available, consult factory
- Actuators available with limit switches and visual indicators.
- Corrosion resistant anodized aluminum housing.
- Epoxy coated housing available.
- Solenoids availabe, direct or nipple mount.

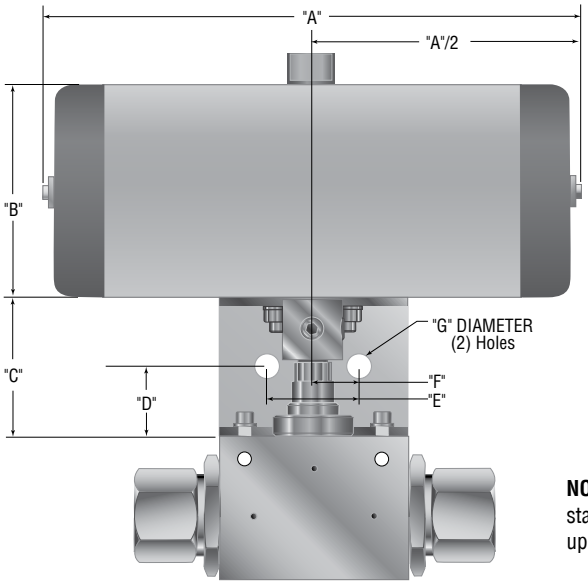

NOTE: Operators 90° rotations standard. 180° options available upon request.

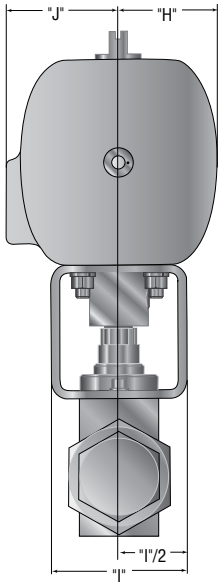

Electric Operated Ball Valves

Add the suffix **-EO1**, **-EO2** or **-EO3** to the appropriate valve catalog number for a complete valve assembly

VALVE SERIES	DIMENSION DATA - Inches (mm)						VOLTAGE	
	"A"	"B"	"C"	"D"	"E"	"F"		
2B4-EO1 2B4-EO2	2.50 (63.50)	1.25 (31.75)	1.00 (25.40)	0.50 (12.70)	0.28 (7.11)	2.50 (63.50)	120 VAC 240 VAC	50/60 Hz
2B6-EO1 2B6-EO2	3.00 (76.20)	1.50 (38.10)	1.50 (38.10)	0.75 (19.05)	0.34 (8.63)	3.00 (76.20)	120 VAC 240 VAC	50/60 Hz
3BD3-EO1 3BD3-EO2	2.50 (63.50)	1.25 (31.75)	1.00 (25.40)	0.50 (12.70)	0.28 (7.11)	2.50 (63.50)	120 VAC 240 VAC	50/60 Hz
3BD6-EO1 3BD6-EO2	3.00 (76.20)	1.50 (38.10)	1.50 (38.10)	0.75 (19.05)	0.34 (8.63)	3.00 (76.20)	120 VAC 240 VAC	50/60 Hz
2B4-EO3	2.50 (63.50)	1.25 (31.75)	1.00 (25.40)	0.50 (12.70)	0.28 (7.11)	2.50 (63.50)	24 VDC	
2B6-EO3	3.00 (76.20)	1.50 (38.10)	1.50 (38.10)	0.75 (19.05)	0.34 (8.63)	3.00 (76.20)	24 VDC	
3BD3-EO3	2.50 (63.50)	1.25 (31.75)	1.00 (25.40)	0.50 (12.70)	0.28 (7.11)	2.50 (63.50)	24 VDC	
3BD6-EO3	3.00 (76.20)	1.50 (38.10)	1.50 (38.10)	0.75 (19.05)	0.34 (8.63)	3.00 (76.20)	24 VDC	

NOTE:
- EO1: Electric 120 VAC
- EO2: Electric 220 VAC
- EO3: Electric 24 VDC
- CSA approved for NEMA 4 & 4X
- For other voltages consult factory
- Actuator operating temperature: 0°F to 160°F (-17°C to 71°C)
- Corrosive resistant Zytel housing
- Consult factory for epoxy option

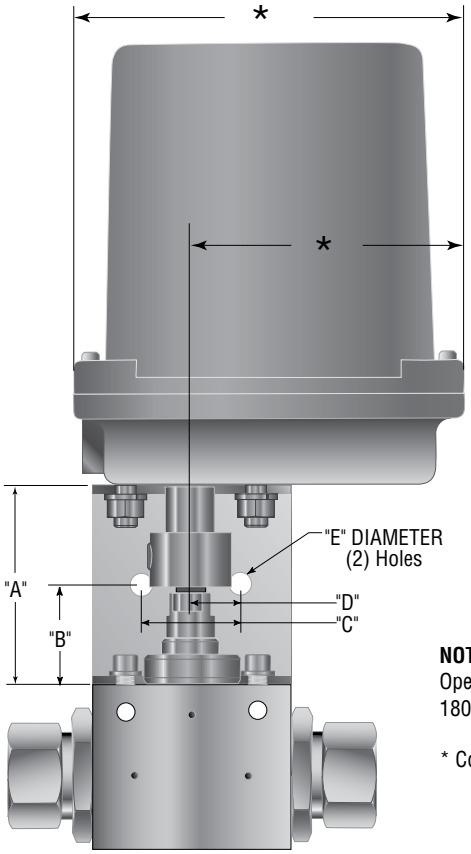

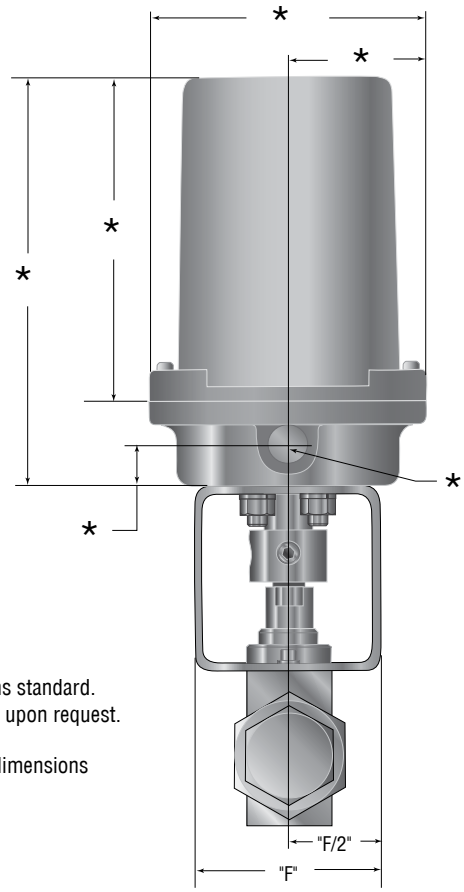

NOTE:
Operators 90° rotations standard.
180° options available upon request.

* Contact factory for dimensions

Electric Operated Ball Valves

Add the suffix **-EO1**, **-EO2** or **-EO3** to the appropriate valve catalog number for a complete valve assembly

VALVE SERIES	VOLTAGE 50/60 HZ	VALVE SERIES	VOLTAGE
2B8-EO1	120 VAC	2B8-EO3	24 VDC
3BD8-EO1	120 VAC	3BD8-EO3	24 VDC
2B8-EO2	220 VAC	2B8-EO3	24 VDC
3BD8-EO2	220 VAC	3BD8-EO3	24 VDC

NOTE:

- EO1: Electric 120 VAC
- EO2: Electric 220 VAC
- EO3: Electric 24 VDC
- Explosion proof
- Actuator operating temperature: 0°F to 160°F (-17°C to 71°C)
- Powder coated aluminum housing
- CE marked
- UL listed & CSA approved for NEMA 4, 4x, 7 & 9
- For other voltages consult factory

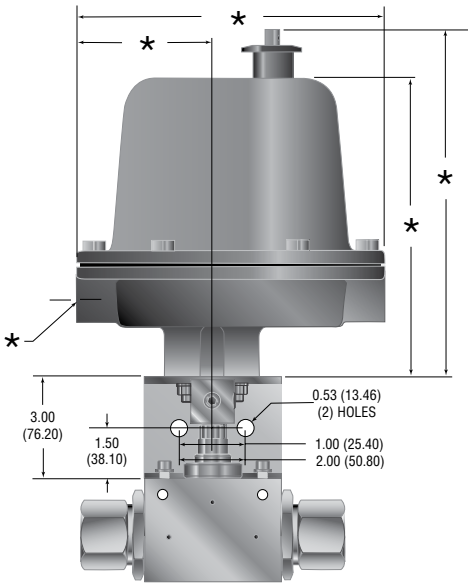

NOTE:

* Contact factory for dimensions

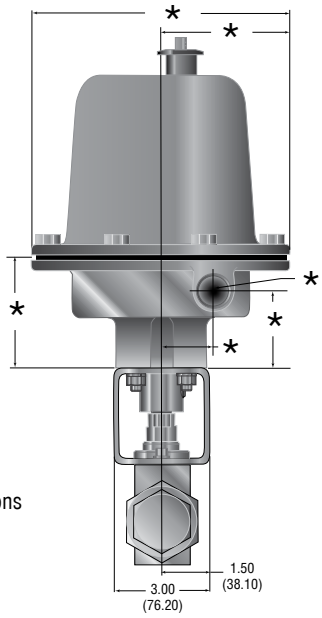

WARNING

FAILURE, IMPROPER SELECTION OR IMPROPER USE OF THE PRODUCTS AND/OR SYSTEMS DESCRIBED HEREIN OR RELATED ITEMS CAN CAUSE DEATH, PERSONAL INJURY AND PROPERTY DAMAGE.

This document and other information from Parker Hannifin Corporation, its subsidiaries and authorized distributors provide product and/or system options for further investigation by users having technical expertise. It is important that you analyze all aspects of your application and review the information concerning the product or system in the current product catalog. Due to the variety of operating conditions and applications for these products or systems, the user, through its own analysis and testing, is solely responsible for making the final selection of the products and systems and assuring that all performance, safety and warning requirements of the application are met. The products described herein, including without limitation, product features, specifications, designs, availability and pricing, are subject to change by Parker Hannifin Corporation and its subsidiaries at any time without notice.

Offer of Sale

The items described in this document are available for sale by Parker Hannifin Corporation, its subsidiaries or its authorized distributors. Any sale contract entered by Parker will be governed by the provisions stated in Parker's standard terms and conditions of sale (copy available upon request).

02-0109SE January2013

Instrumentation Products Division
Autoclave Engineers Operation
8325 Hessinger Drive
Erie, Pennsylvania 16509-4679 USA
PH: 814-860-5700 FAX: 814-860-5811
www.autoclave.com

Parker Hannifin Manufacturing Ltd.
Instrumentation Products Division, Europe
Industrial Estate Whitemill
Wexford, Republic of Ireland
PH: 353 53 914 1566
FAX: 353 53 914 1582

Caution! Do not mix or interchange parts or tubing with those of other manufacturers. Doing so is unsafe and will void warranty.

Caution! Parker Autoclave Engineers Valves, Fittings and Tools are not designed to work with common commercial instrument tubing and will only work with tubing built to Parker Autoclave Engineers AES Specifications. Failure to do so will void warranty.

ISO-9001 Certified

Ball Valves

Options / Details

Parker Autoclave Engineers ball valves can be supplied with a number of options to meet your requirements. Options consist of different materials of construction, seal material, high temperature seals, handle colors, handle lockouts, limit switches or limit switches with visual indicators for pneumatic actuators.

Replacement of the old style ball valve with the new style is also addressed with complete ordering information.

The following pages provide details on the available options, as well as tube connection dimensions. For additional information on these options, or technical information not found in this or any other section, consult the factory or local distributor.

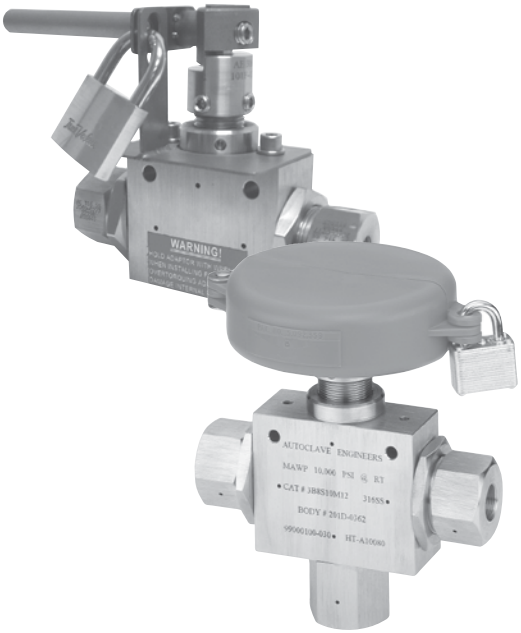

Parker

Autoclave Engineers

www.autoclave.com

High Temperature Option

Ball valves are available with alternate o-rings for high temperature operation. Standard Viton o-rings are replaced with Kalrez o-rings to increase the operating temperature to 500°F (260°C). To specify this option, add "-HT" to the catalog number as shown in the ball valve sections.

High temperature pneumatic valve actuators are also available. Consult factory with your application and for specific information.

Material Options

Standard ball valves are constructed of 316 stainless steel. Other materials are available for specific applications upon request. NACE (MR0175-2002) approved materials for sour service can be supplied upon request. Consult factory for later NACE revisions and for the materials available as well as the temperature and pressure ratings.

Limit Switches or Limit Switches with Visual Indicators

Pneumatic actuators are available with limit switches or limit switches with visual indicators. Consult the factory for information on these items or questions concerning your applications.

Handle Lockouts

Handle lockouts are available to lockout ball valves in the open or closed position preventing unauthorized personnel from actuating valves during shutdowns or emergency situations.
Note: To purchase ball valves with lockouts add -L to part number.

Part numbers to purchase lockout separately:

2-Way Ball Valves	3-Way Ball Valves
1/4" 2B4-L	3/16" 3B3-L
3/8" 2B6-L	3/8" 3B6-L
1/2" 2B8-L	1/2" 3B8-L

For 3-way switching ball valves, consult factory.
For 6DB (double block and bleed) valves use two 2B6-L lockouts.

Obsolete Ball Valves

Ball valves complete with connection adapters are available for direct replacement of our older obsolete ball valve. The ball valve seat glands are designed to permit replacement without having to modify your existing tubing. To order valves for direct replacement add "-OS" to the end of the standard ball valve catalog number.
Note: This applies only to the 1/4" 2-way ball valve.

Connection Detail Dimensions

The following are reference dimensions for the tube connections used in the ball valves. For complete connection information see the Tools, Installation, Operation and Maintenance section in the Parker Autoclave Engineers Fluid Components complete catalog.

Tube Connection Dimensions - AE SpeedBite SW *

Tube Outside Diameter inches (mm)	Connection Type	Dimensions - Inches (mm)						
		A	B	C	D	E	F	G
1/4 (6.35)	SW250	29/64 (11.50)	1/2 -20 (12.7) -20	0.34 (8.64)	0.44 (11.20)	0.69 (17.50)	0.35 (8.89)	"F" 0.257 "F" (6.53)
3/8 (19.50)	SW375	37/64 (14.70)	5/8 -18 (15.90) -18	0.38 (9.65)	0.47 (11.90)	0.75 (19.10)	0.48 (12.20)	"W" 0.386 "W" (9.80)
1/2 (12.70)	SW500	3/4 (19.10)	13/16 -16 (20.60) -16	0.41 (10.50)	0.50 (12.70)	0.81 (20.60)	0.60 (15.20)	0.514 (13.100)

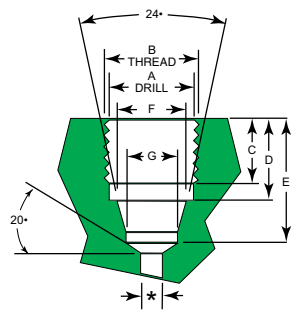

Tube Connection Dimensions - AE SpeedBite W *

Tube Outside Diameter inches (mm)	Connection Type	Dimensions - Inches (mm)						
		A	B	C	D	E	F	G
1/8 (3.18)	W125	"Q" 0.332 "Q" (8.43)	3/8 -24 (9.53) -24	0.22 (5.59)	0.31 (7.87)	0.47 (11.90)	0.19 (4.83)	#30 0.128 #30 (3.25)
1/4 (6.35)	W250	11/16 (17.50)	3/4 -16 (19.10) -16	0.38 (9.65)	0.44 (11.20)	0.69 (17.50)	0.35 (8.89)	"F" 0.257 "F" (6.53)
3/8 (9.53)	W375	11/16 (17.50)	3/4 -16 (19.10) -16	0.38 (9.65)	0.44 (11.20)	0.69 (17.50)	0.48 (12.20)	"W" 0.386 "W" (9.80)

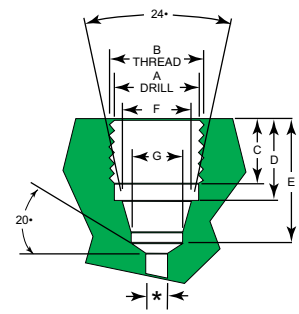

Note: All dimensions are shown for reference only and should not be considered as actual machine dimensions.

For prompt service, Parker Autoclave Engineers stocks select products. Consult factory

** For port diameter please see orifice sizes for specific valves and fittings. All threads are manufactured to a class 2A or 2B fit.*

Tube Connection Dimensions - AE Medium Pressure SFCX **

Tube Outside Diameter inches (mm)	Connection Type	Dimensions - Inches (mm)				
		A	B	C	D	F
1/4 (6.35)	SF250CX20	25/64 (9.92)	7/16 -20 (11.10) -20	0.28 (7.11)	0.50 (12.70)	0.19 (4.83)
3/8 (9.53)	SF375CX20	33/64 (13.10)	9/16 -18 (14.30) -18	0.38 (9.65)	0.62 (15.70)	0.31 (7.87)
9/16 (14.30)	SF562CX20	3/4 (19.10)	13/16 -16 (20.60) -16	0.44 (11.20)	0.75 (19.10)	0.50 (12.70)
3/4 (19.10)	SF750CX20	61/64 (24.20)	3/4 -14Z (19.10) -14Z	0.50 (12.70)	0.94 (23.90)	0.62 (15.70)
1 (25.40)	SF100CX20	1 -19/64 (32.90)	1-3/8 -12 (34.90) -12	0.81 (20.60)	1.31 (33.30)	0.88 (22.40)
1-1/2 (38.10)	SF1500CX	1-25/32 (45.24)	1-7/8-12 (47.63)-12	1.00 (25.40)	1.59 (40.49)	1.38 34.93)

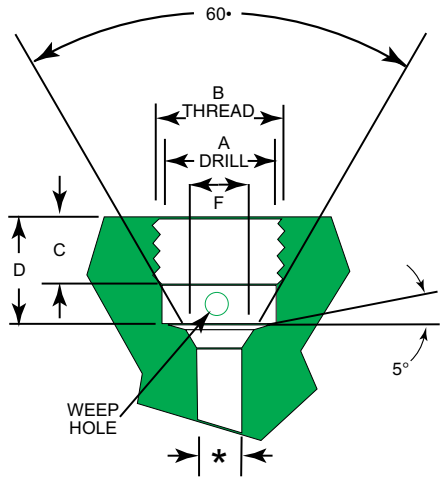

Z = NPS Male Tap

Tube Connection Dimensions - AE HighPressure FC **

Tube Outside Diameter inches (mm)	Connection Type	Dimensions - Inches (mm)				
		A	B	C	D	F
1/4 (6.35)	F250C	33/64 (13.10)	9/16 -18 (14.30) -18	0.38 (9.65)	0.44 (11.20)	0.17 (4.32)
3/8 (9.53)	F375C	11/16 (17.50)	3/4 -16 (19.10) -16	0.53 (13.50)	0.62 (15.70)	0.26 (6.60)
9/16 (14.30)	F562C	1-3/64 (26.60)	1-1/8 -12 (28.60) -12	0.62 (15.70)	0.75 (19.10)	0.38 (9.65)

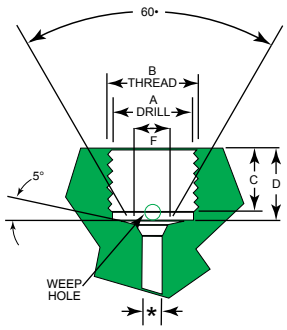

Note: All dimensions are shown for reference only and should not be considered as actual machine dimensions.

** For port diameter please see orifice sizes for specific valves and fittings.*

*** For male tubing end preparation, please see pages "Tools, Installation" section in main catalog.*

All threads are manufactured to a class 2A or 2B fit.

For prompt service, Parker Autoclave stocks select products. Consult factory.

WARNING

FAILURE, IMPROPER SELECTION OR IMPROPER USE OF THE PRODUCTS AND/OR SYSTEMS DESCRIBED HEREIN OR RELATED ITEMS CAN CAUSE DEATH, PERSONAL INJURY AND PROPERTY DAMAGE.

This document and other information from Parker Hannifin Corporation, its subsidiaries and authorized distributors provide product and/or system options for further investigation by users having technical expertise. It is important that you analyze all aspects of your application and review the information concerning the product or system in the current product catalog. Due to the variety of operating conditions and applications for these products or systems, the user, through its own analysis and testing, is solely responsible for making the final selection of the products and systems and assuring that all performance, safety and warning requirements of the application are met. The products described herein, including without limitation, product features, specifications, designs, availability and pricing, are subject to change by Parker Hannifin Corporation and its subsidiaries at any time without notice.

Offer of Sale

The items described in this document are available for sale by Parker Hannifin Corporation, its subsidiaries or its authorized distributors. Any sale contract entered by Parker will be governed by the provisions stated in Parker's standard terms and conditions of sale (copy available upon request).

02-0110SE January2013

Instrumentation Products Division
Autoclave Engineers Operation
8325 Hessinger Drive
Erie, Pennsylvania 16509-4679 USA
PH: 814-860-5700 FAX: 814-860-5811
www.autoclave.com

Parker Hannifin Manufacturing Ltd.
Instrumentation Products Division, Europe
Industrial Estate Whitemill
Wexford, Republic of Ireland
PH: 353 53 914 1566
FAX: 353 53 914 1582

Caution! Do not mix or interchange parts or tubing with those of other manufacturers. Doing so is unsafe and will void warranty.

Caution! Parker Autoclave Engineers Valves, Fittings and Tools are not designed to work with common commercial instrument tubing and will only work with tubing built to Parker Autoclave Engineers AES Specifications. Failure to do so will void warranty.

ISO-9001 Certified

Relief Valve

Pressures to 75,000 psi (5171 bar)

RVP Metal Seat Relief Valves

Series RVP relief valves provide reliable venting of gases or liquids for set pressures from 3,000 psi (206.8 bar) minimum to 75,000 psi (5171 bar). The standard temperature range for all models is -423° to 400° (-252° to 204°C). A high temperature option to 750°F (399°C) is also available.

These precision valves are designed for pressure gas systems, cryogenic systems, petrochemical applications and other special systems. Capable of handling air, gases, steam, vapor and liquids, they are however, **not recommended for steam boiler applications nor are they ASME code stampable.**

RVS Soft Seat Relief Valves

Series RVS relief valves utilize a soft seat design for reliable venting of gases at set pressures from 1,500 psi (103 bar) to 20,000 psi (1378 bar). The operating temperature range is 32°F (0°C) to 400°F (204°C).

The soft seat design provides bubble tight sealing, repeatable pop-off, and reseat. Additionally, soft seat valves provide a higher cycle life than metal seat relief valves.

These precision valves are designed for pressure gas systems, where zero leakage is critical. They are not recommended for liquid nitrogen or liquid carbon dioxide, which produce gas at cryogenic temperatures upon relief.

Relief valves are designed to open proportionally to increasing pressure. Therefore, they are not recommended for applications requiring immediate full valve flow at set pressure (such as decompositions, polymerizations, etc.). Full flow of relief valve is defined at 10% over set pressure.

Parker

Autoclave Engineers®

www.autoclave.com